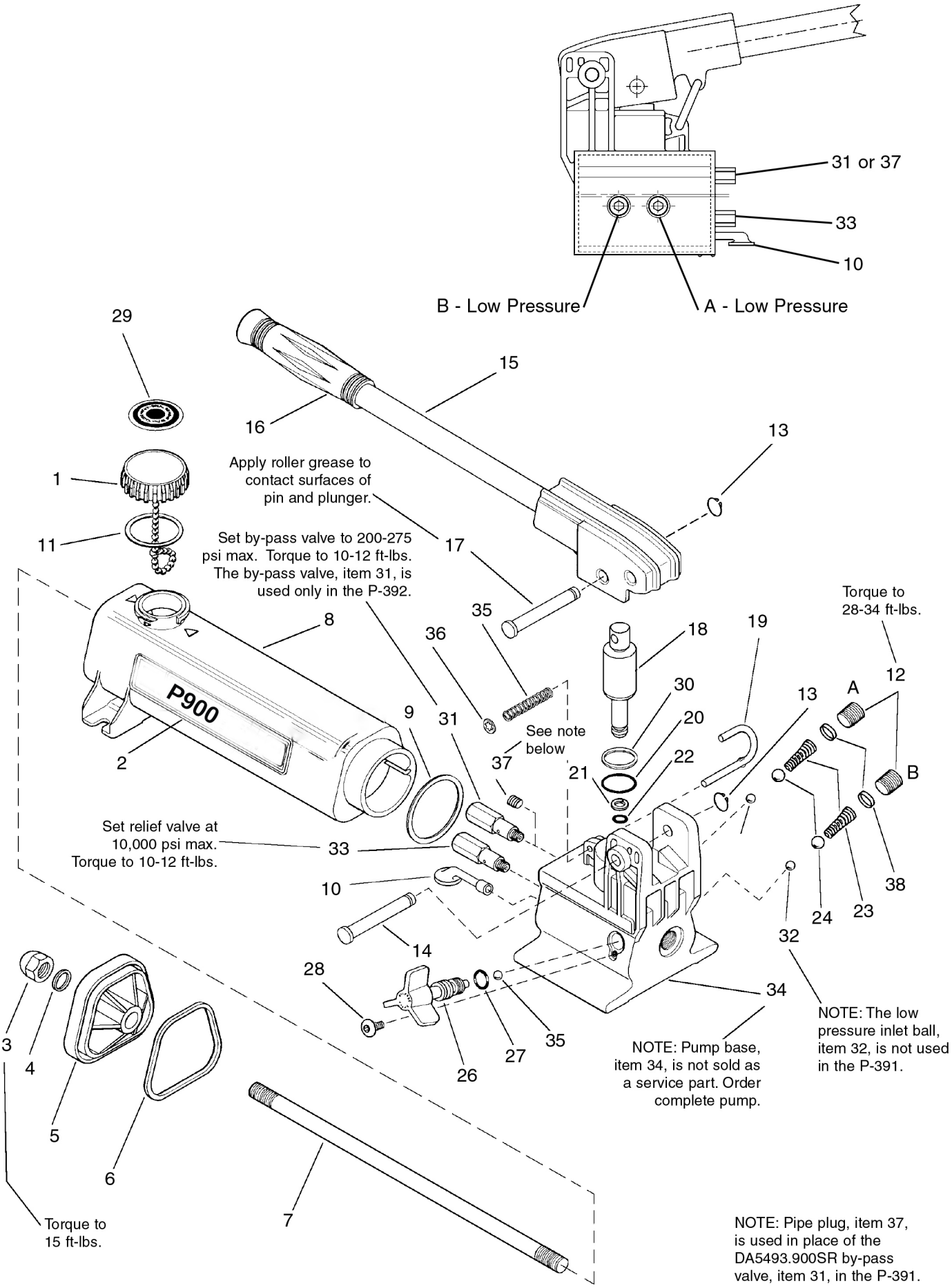
31 or 37
33
10
B - Low Pressure
A - Low Pressure
29
15
16
13
1
Apply roller grease to contact surfaces of pin and plunger.
11
17
Set by-pass valve to 200-275 psi max. Torque to 10-12 ft-lbs. The by-pass valve, item 31, is used only in the P-392.
35
8
36
18
19
Torque to 28-34 ft-lbs.
12
A
13
30
P900
9
31
20
See note below
2
37
22
21
B
Set relief valve at 10,000 psi max. Torque to 10-12 ft-lbs.
33
10
38
24
23
32
14
28
34
3
4
35
27
26
NOTE: Pump base, item 34, is not sold as a service part. Order complete pump.
NOTE: The low pressure inlet ball, item 32, is not used in the P-391.
5
6
7
Torque to 15 ft-lbs.
NOTE: Pipe plug, item 37, is used in place of the DA5493.900SR by-pass valve, item 31, in the P-391.