mod.TWCM
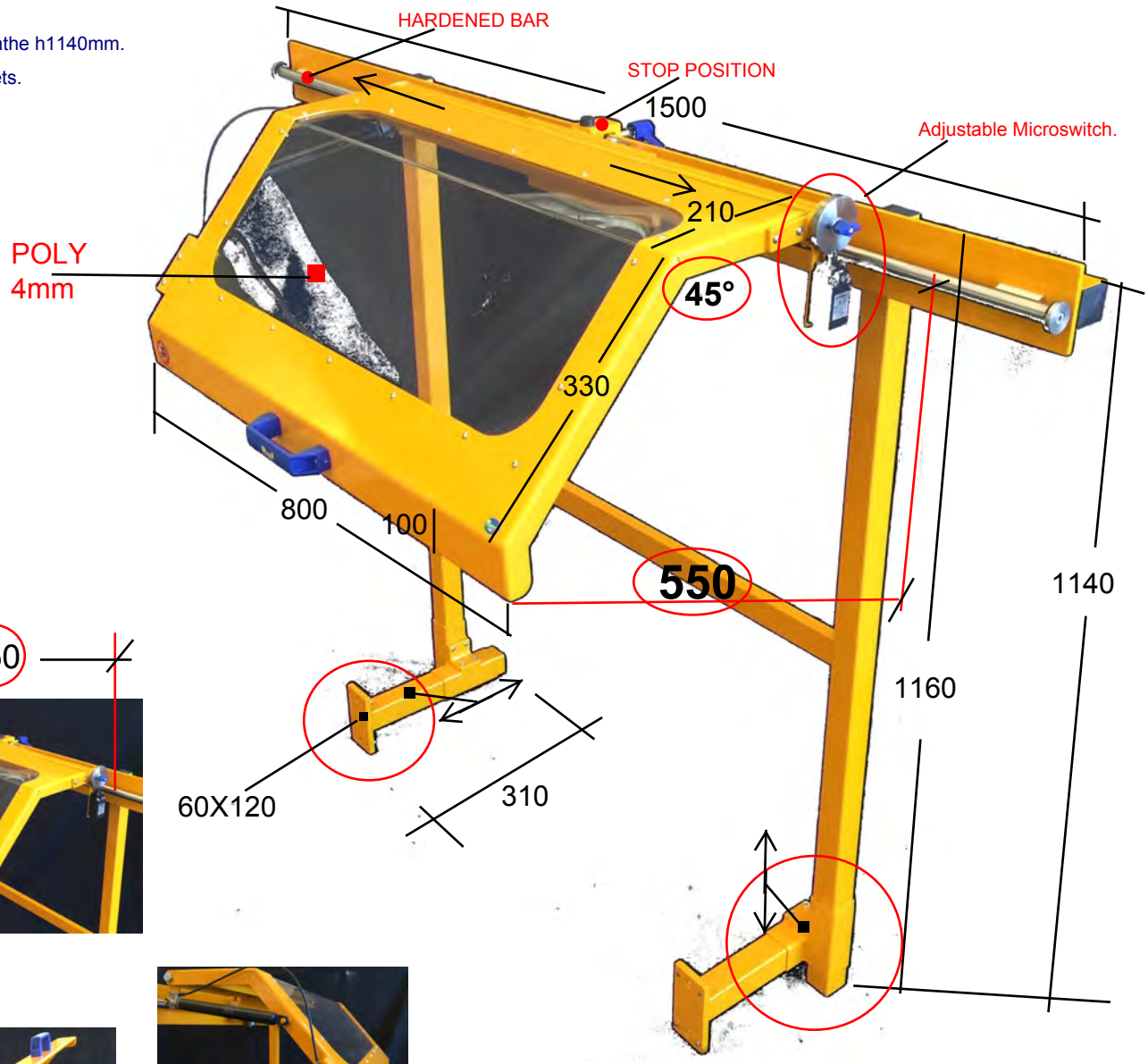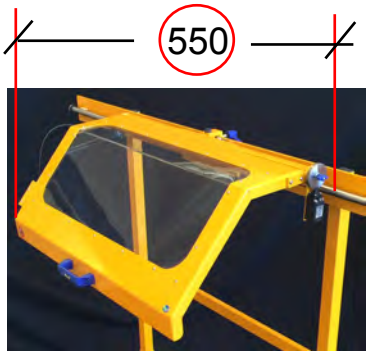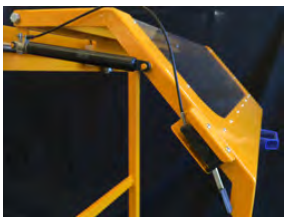
- **Safety Guard for:**
  Lathes and special applications.(Wood Working Lathe)
  This guard can be easily operated with an ADJUSTABLE gas spring and is sliding when necessary.(Rail 1100mm)
- Double Microswitch.
- Column for fixing on lathe h1140mm.
- N°2 Adjustable brackets.