andis

SERVICE PARTS LIST
MODEL AGCB CLIPPER
120/240 VOLT

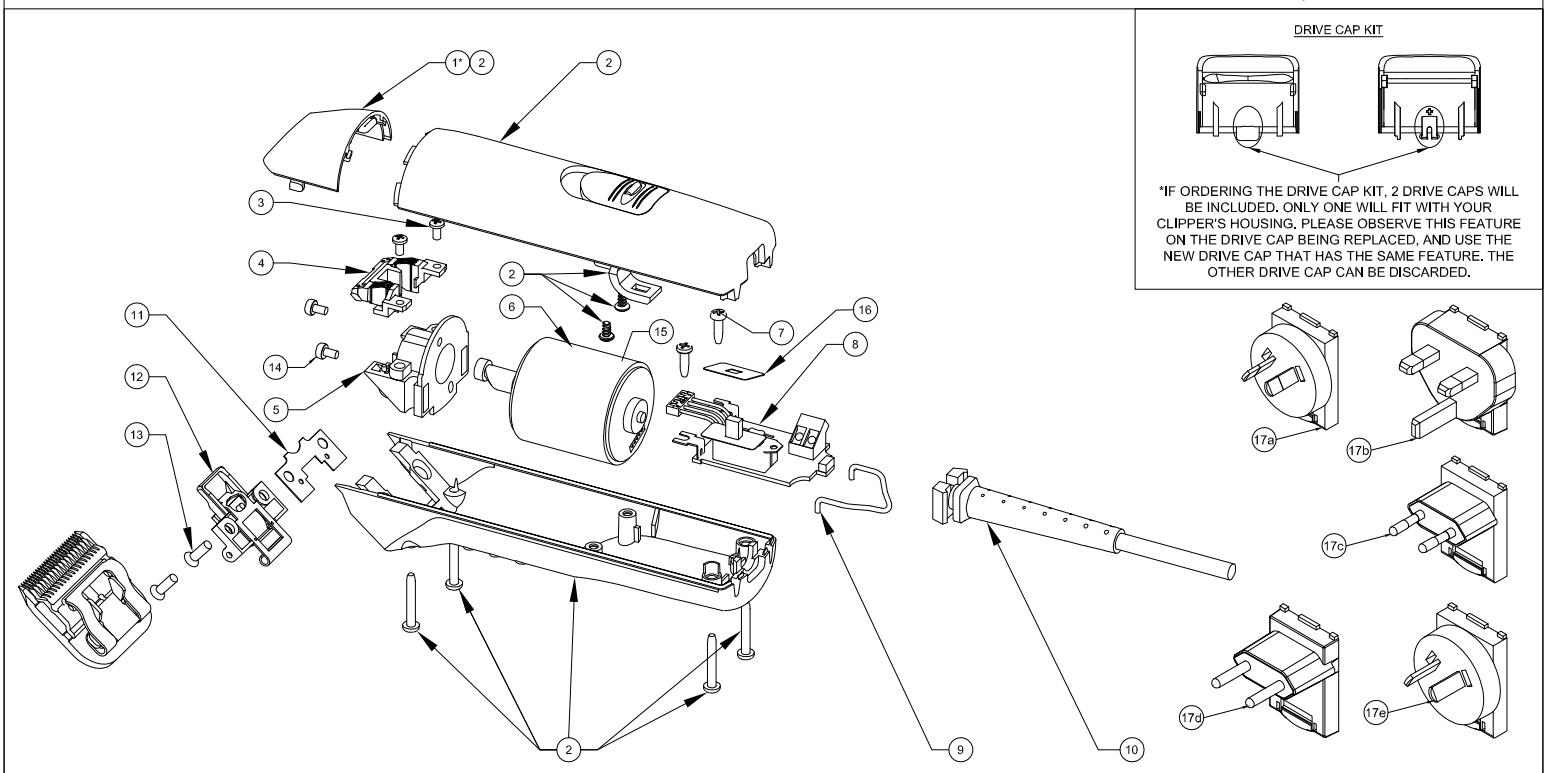

ITEM NO.	PART NO.	DESCRIPTION	QTY. REQ'D
1*		Drive Cap Kit (1+1 Drive Caps - See Note)	
1a	202779	Drive Cap - Black	1
1b	202780	Drive Cap - Burgundy	1
1c	202781	Drive Cap - Metallic Blue	1
1d	202782	Drive Cap - Lime Green	1
1e	202783	Drive Cap - Metallic Fuchsia	1
2		Housing Kit (Drive Cap, Upper Housing + Switch Assembly, Lower Housing, Housing Screws)	
2a	202774	Housing Kit - Black 2-Speed	1
2b	202775	Housing Kit - Burgundy UltraEdge Brushless	1
2c	202776	Housing Kit - Metallic Blue UltraEdge Brushless	1
2d	202777	Housing Kit - Lime Green UltraEdge Brushless	1
2e	202778	Housing Kit - Fuchsia UltraEdge Brushless	1
3	15766	Screw - Web Drive	2
4	201856	Quad Web Drive	1
5	201435	Front Motor Mount	1
6	201573	Motor Assembly	1
7	65828	Screw - PCB Mounting	2
8		PCB Assembly	
8a	201909	PCB Assembly - 3000-3800 RPM	1
8b	201944	PCB Assembly - 2300-3400 RPM	1
9	22267	Hanger Bail	1
10	201666	MBG4 - 24V Wall Adapter	1
11	64535	Lock Keeper	1
12	63897	Hinge Assembly	1
13	27864	Screw - Blade Hinge	2
14	21255	Screw - Motor Mount	2
15	60083	Oil Seal	1
16	21063	Switch Insulator	1
17		Detachable Plugs	
17a	201491	Detachable Plug - Australia	1
17b	201492	Detachable Plug - UK	1
17c	201493	Detachable Plug - Europe	1
17d	201494	Detachable Plug - Brazil	1
17e	201551	Detachable Plug - Argentina	1

ITEM NO.	PART NO.	DESCRIPTION	QTY. REQ'D

IMPORTANT INFORMATION

When ordering repair parts, include part number, part name and model of trimmer. For best performance, trimmer blades should be CLEANED and OILED with Andis Clipper Oil before and after use, If repair is necessary, return to any Andis Authorized Repair Service Station, or to Andis Company, 1800 Renaissance Blvd., Sturtevant, Wisconsin, 53177 U.S.A.. Pack carefully, mail either Insured Parcel Post, or U.P.S. , attach a letter to outside of package explaining difficulty.