BUILT-IN SERIES

Assembled Grill and Burners

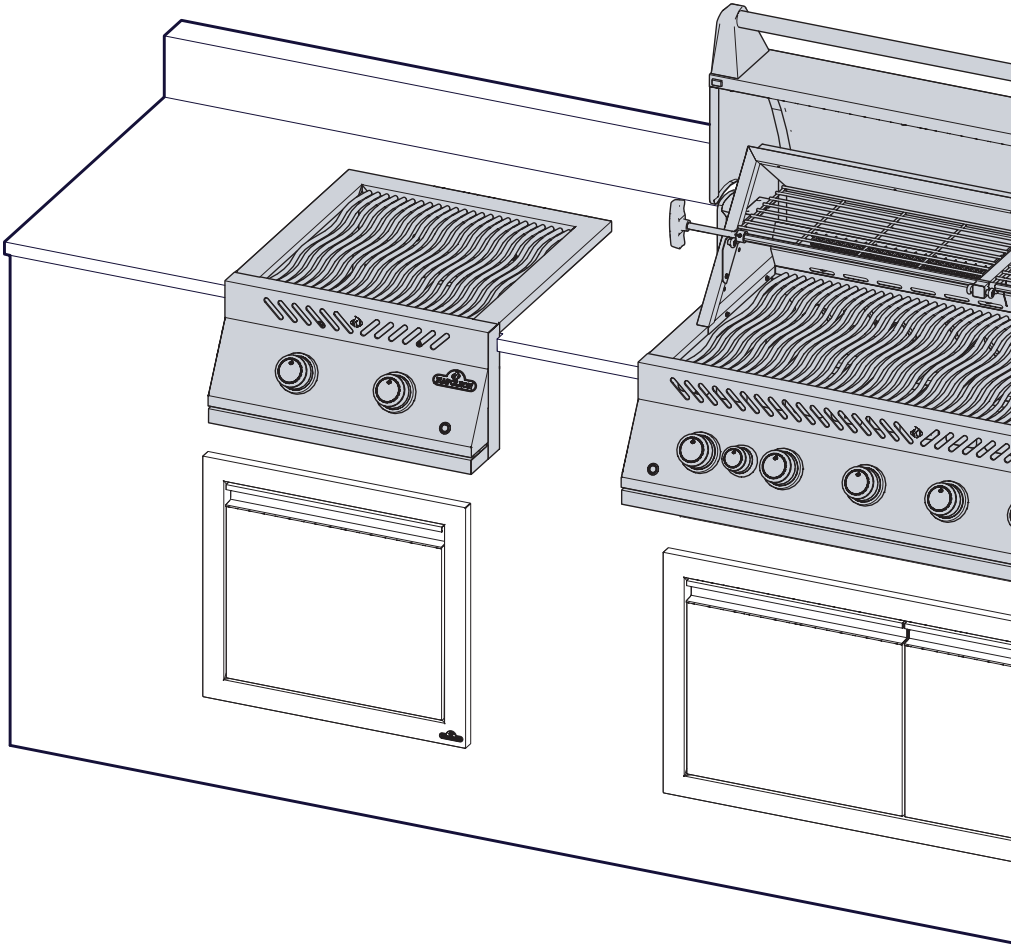

N415-0602.indd 4 3/19/2021 5:06:34 PM

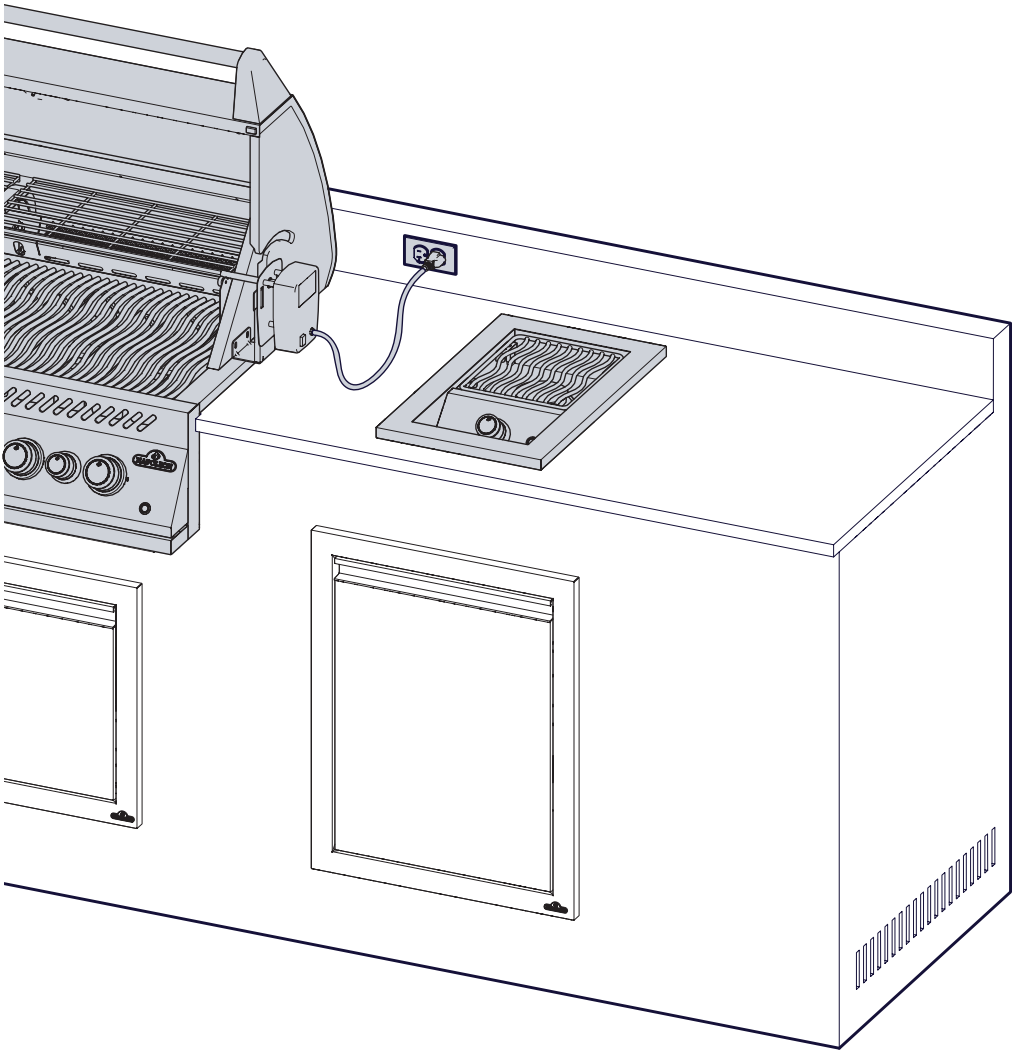

N415-0602.indd 5 3/19/2021 5:06:34 PM

BI-3623-ZCL

BI-4223-ZCL

BI-4823-ZCL

BI-2423-ZCL

BI-1823-ZCL

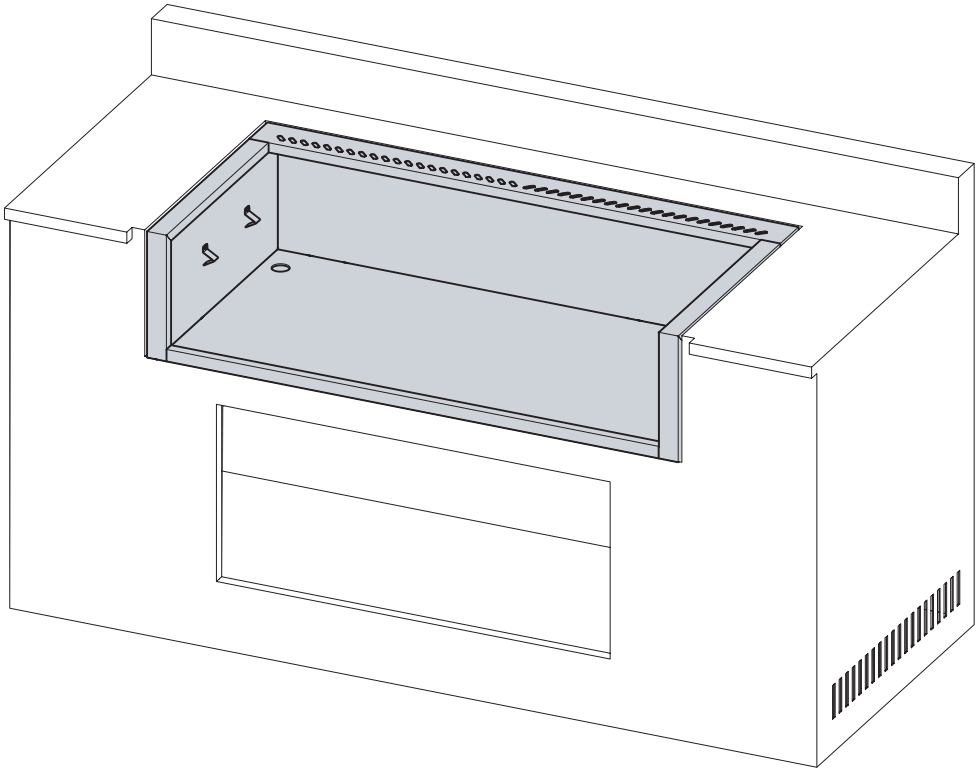

N415-0602.indd 6 3/19/2021 5:06:34 PM

1

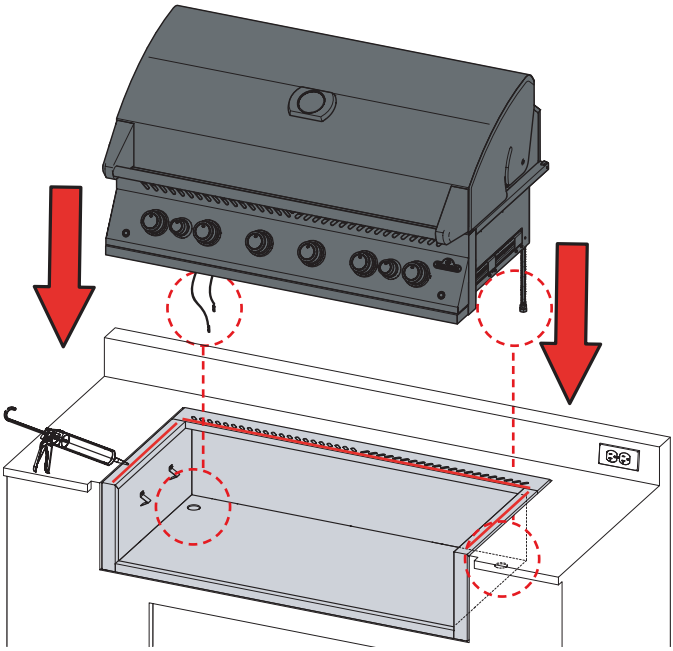

2

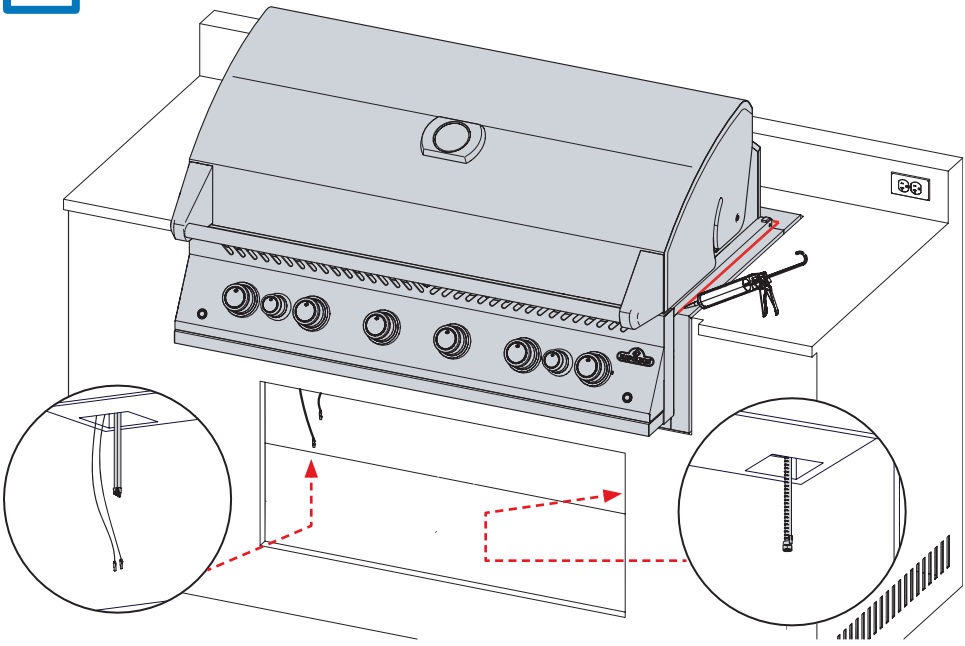

N415-0602.indd 7 3/19/2021 5:06:35 PM

BIG 32 BIG 38 BIG 44

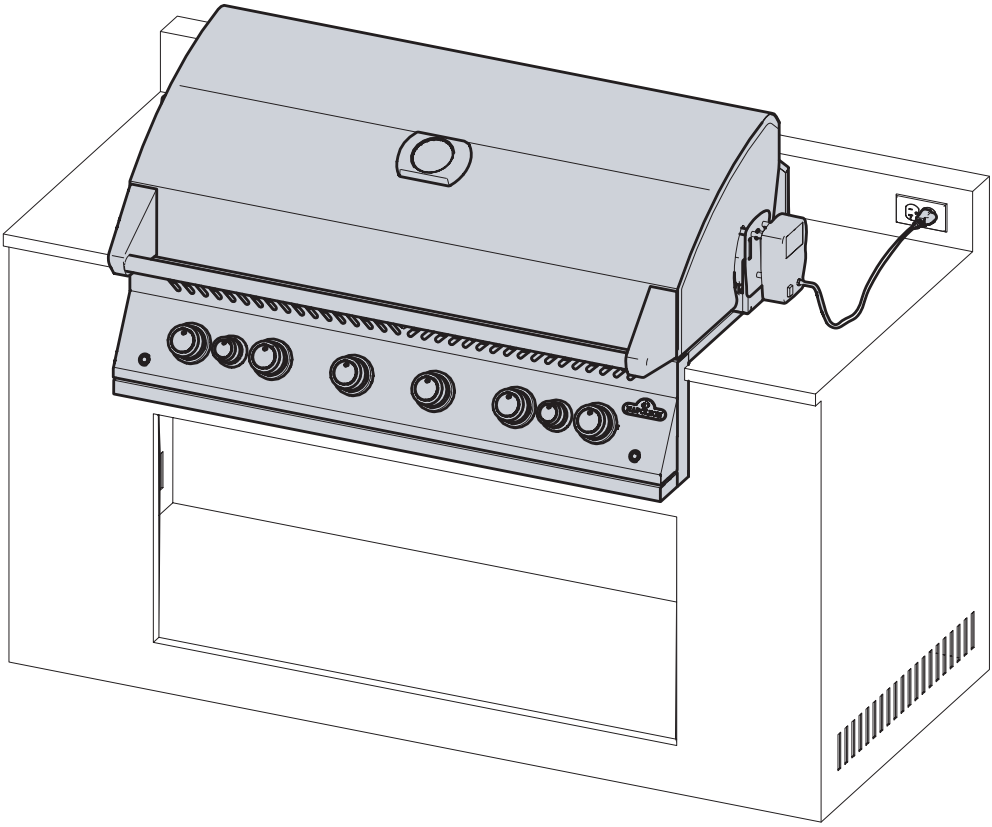

N415-0602.indd 8 3/19/2021 5:06:35 PM

1

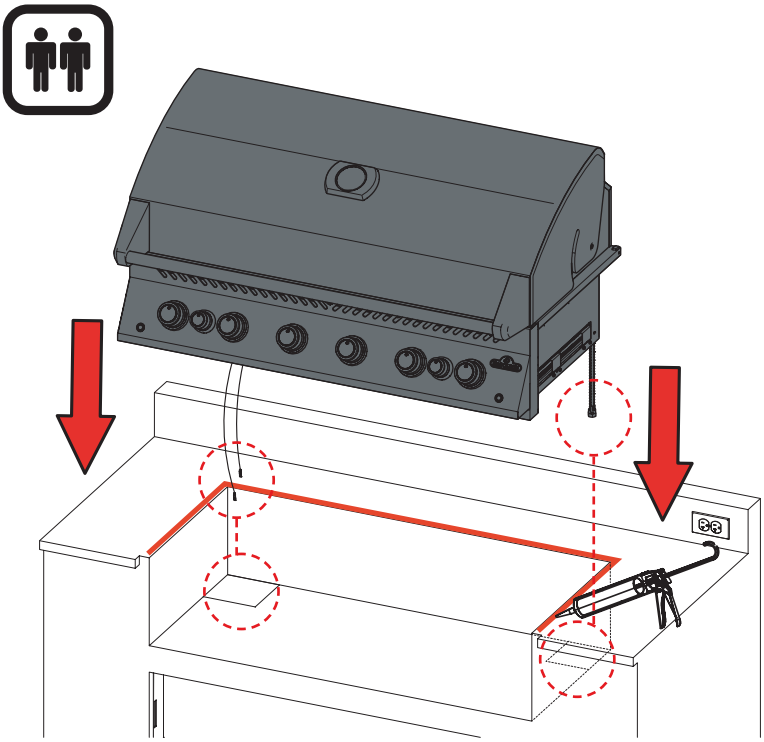

2

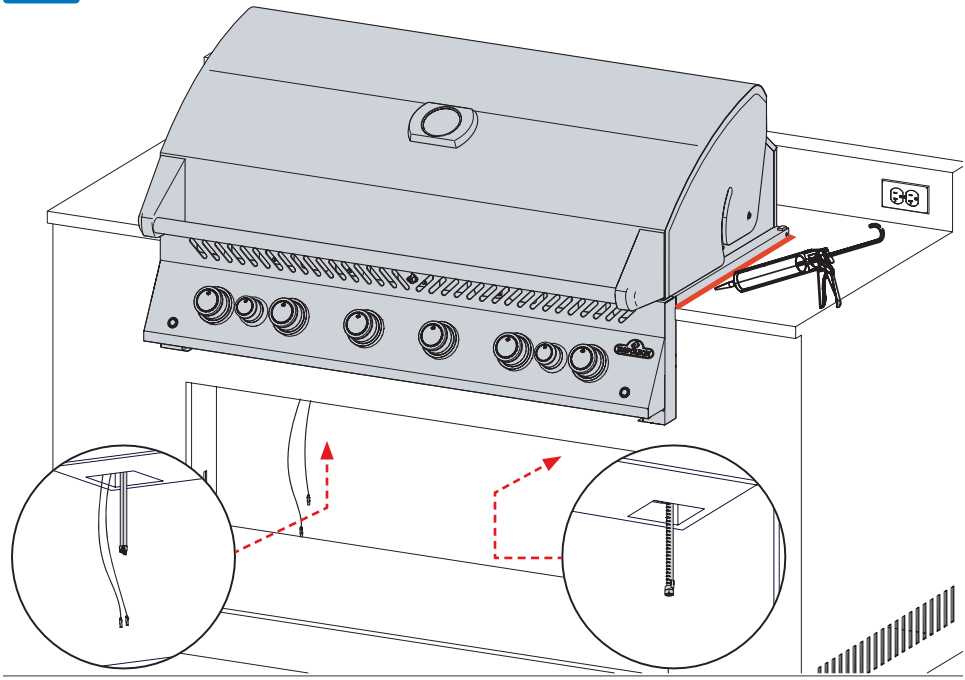

N415-0602.indd 9 3/19/2021 5:06:35 PM

3

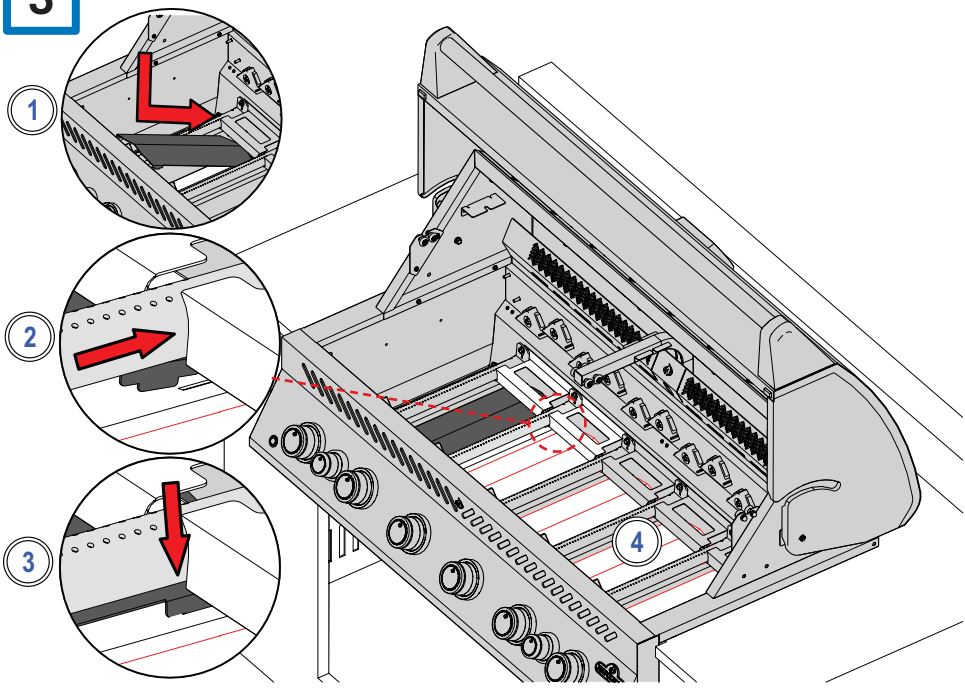

4

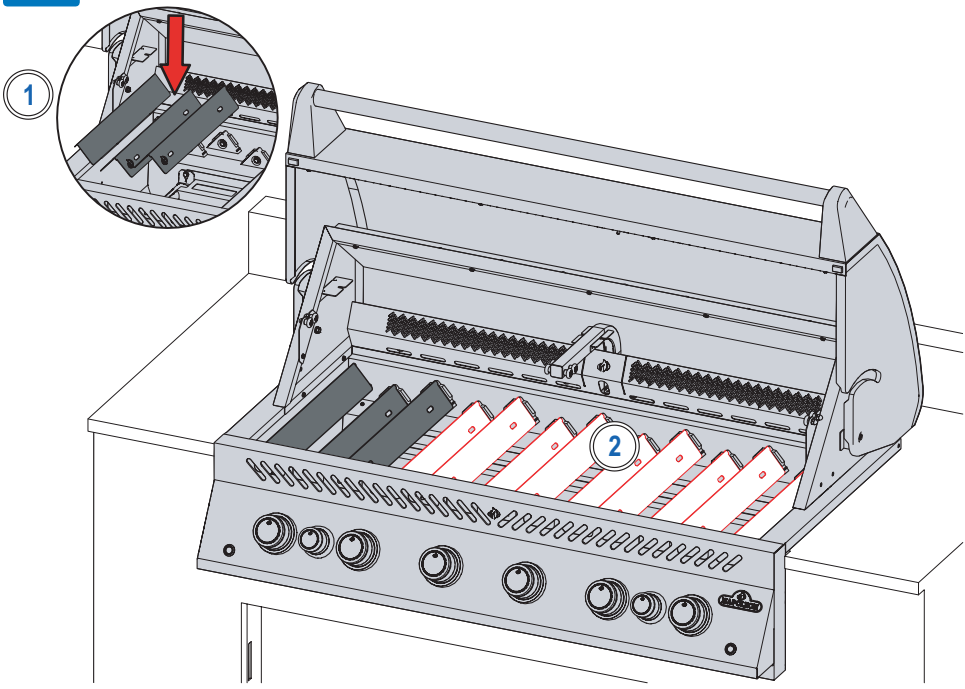

N415-0602.indd 10 3/19/2021 5:06:35 PM

5

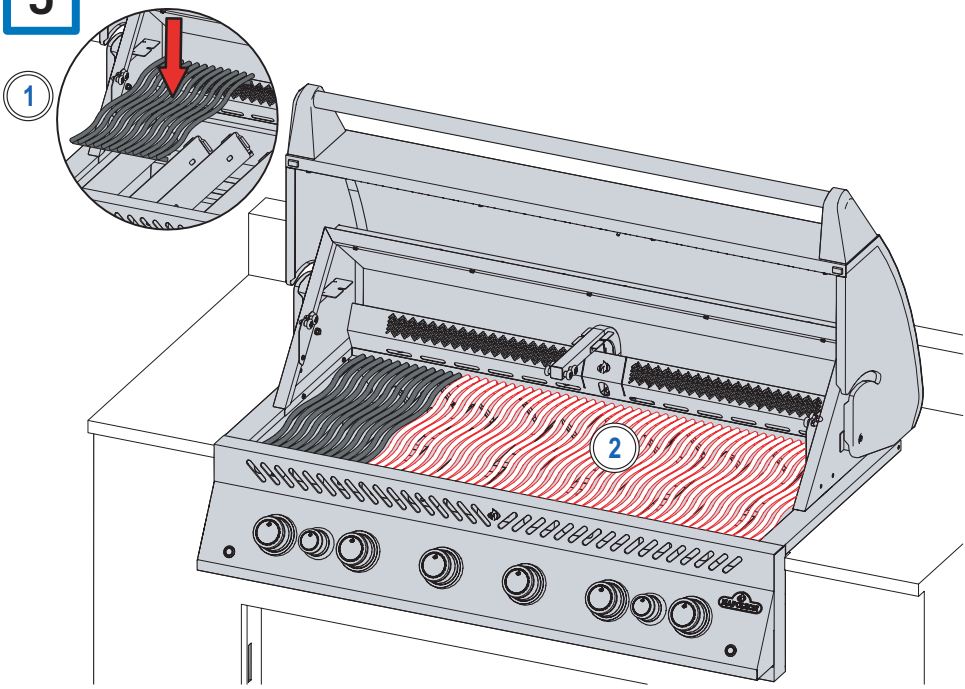

6

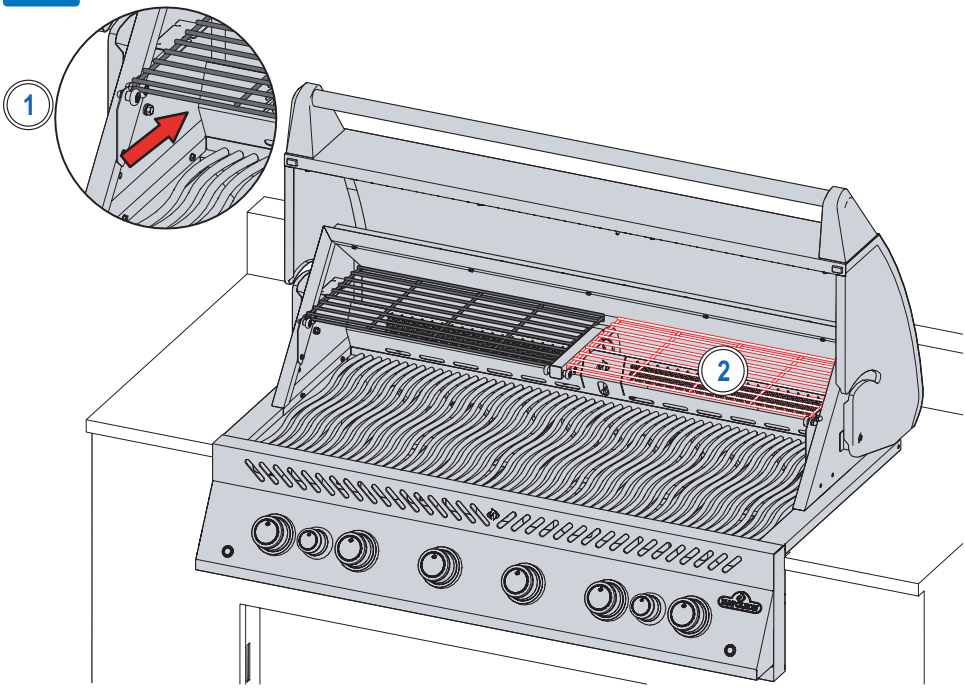

N415-0602.indd 11 3/19/2021 5:06:36 PM

7

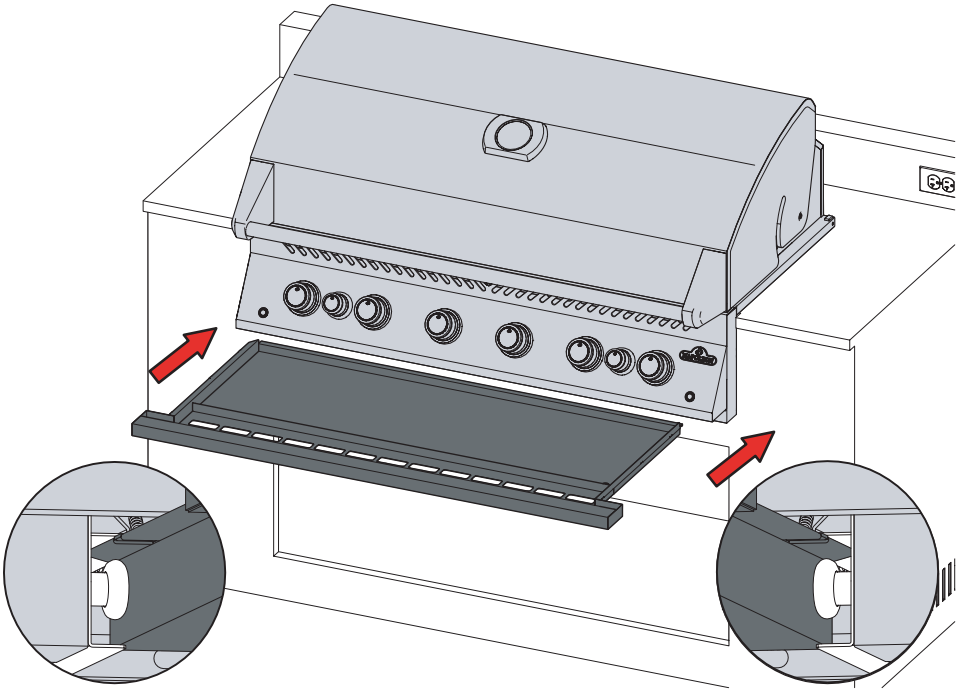

8

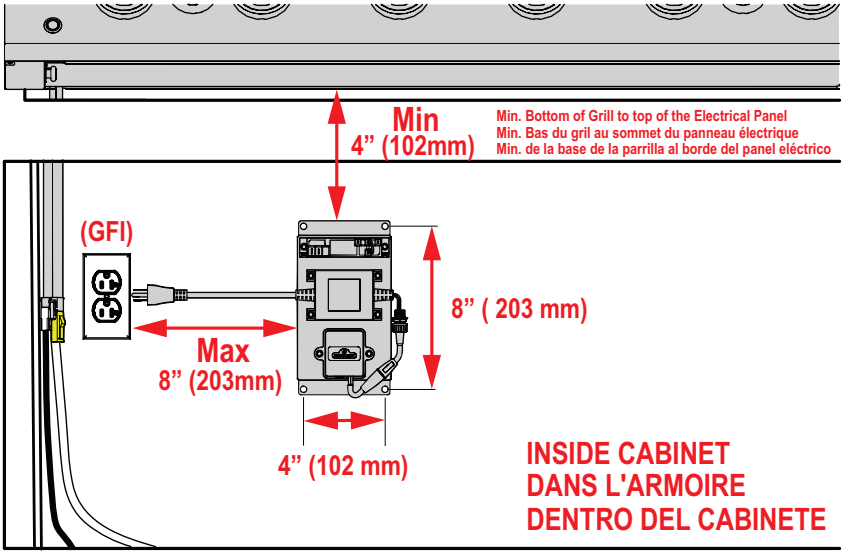

N415-0602.indd 12 3/19/2021 5:06:36 PM

9

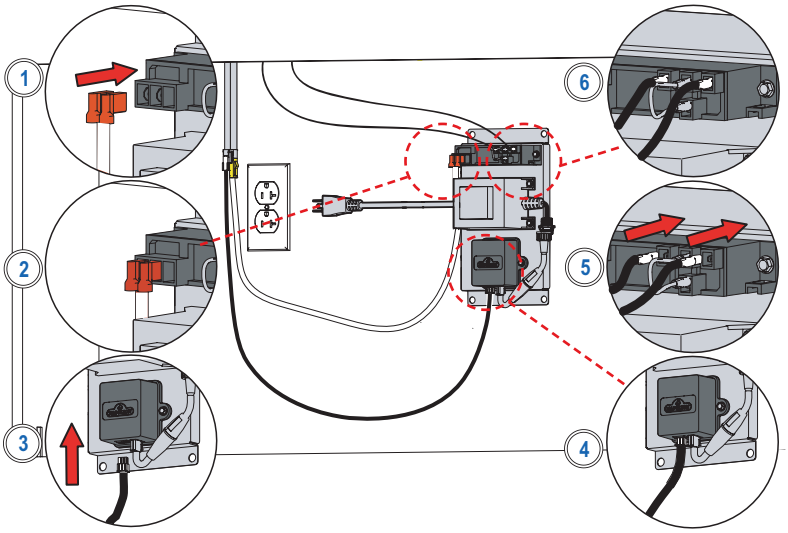

10

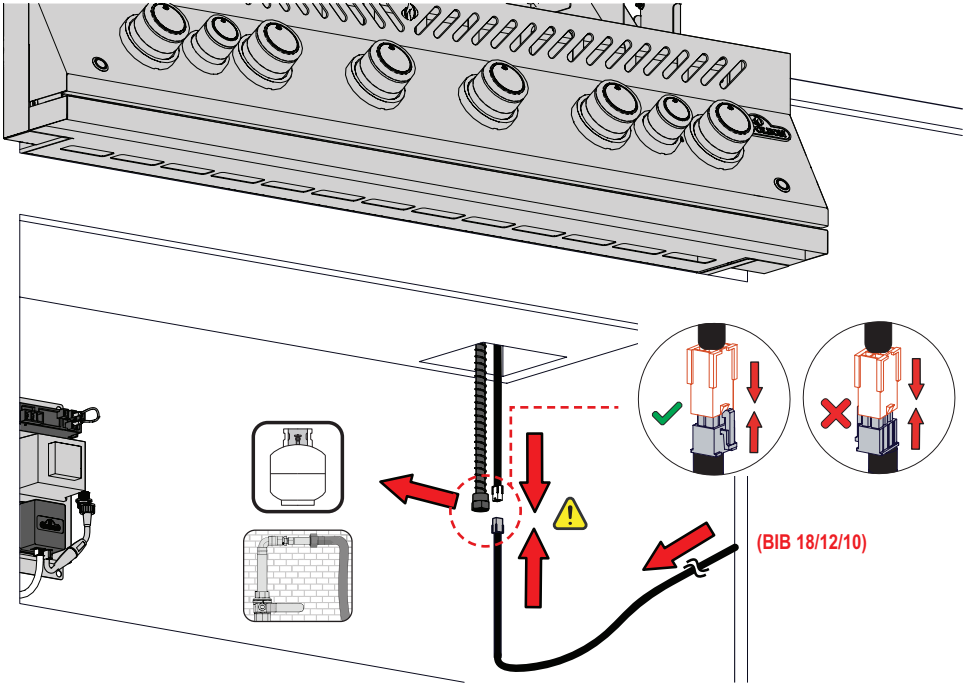

N415-0602.indd 13 3/19/2021 5:06:37 PM

11

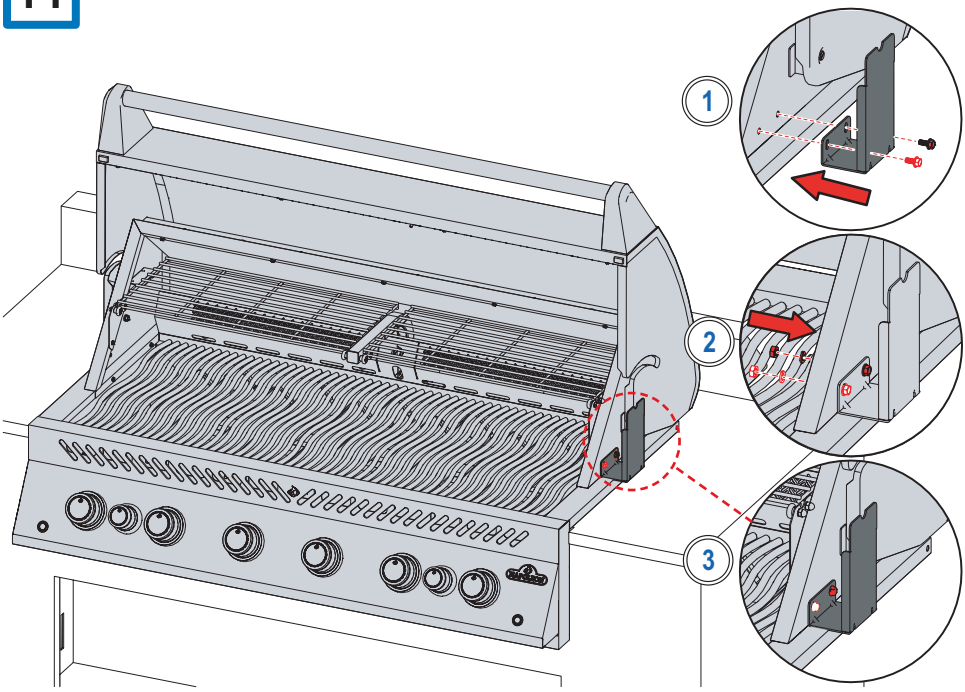

OR / OU / Ó

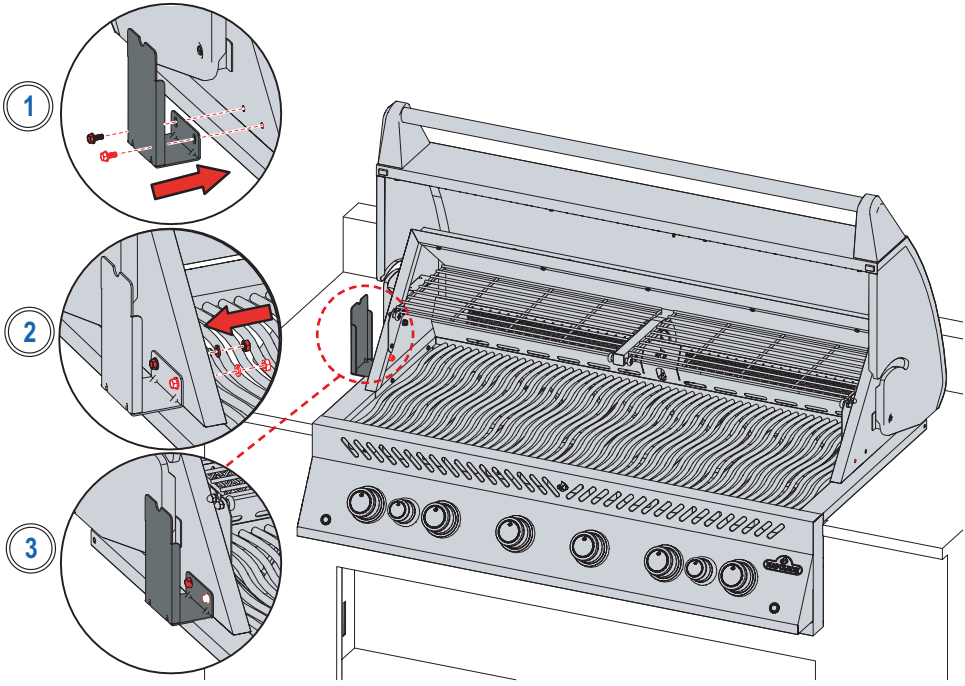

12

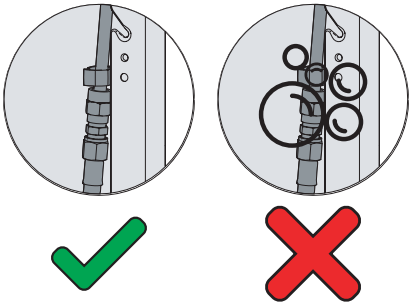

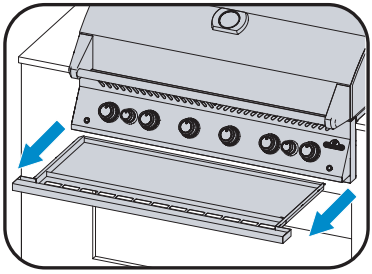

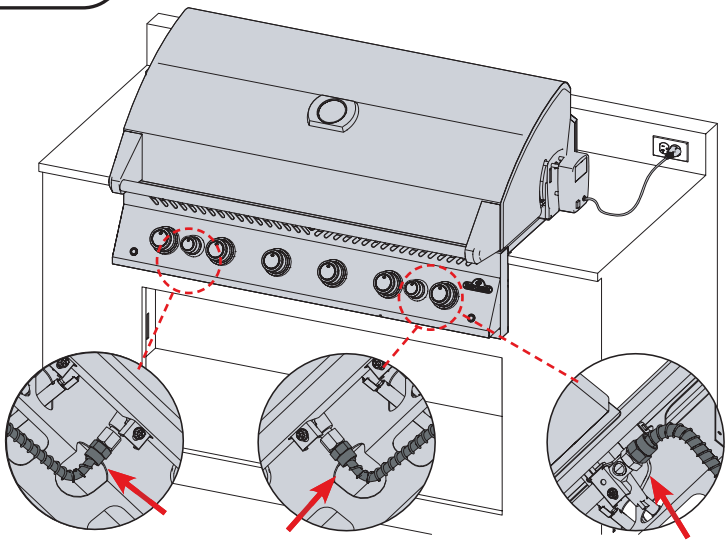

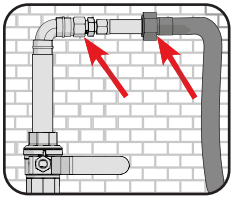

N415-0602.indd 15 3/19/2021 5:06:38 PM

BIB12RT BIB18PB BIB18IR BIB18RT

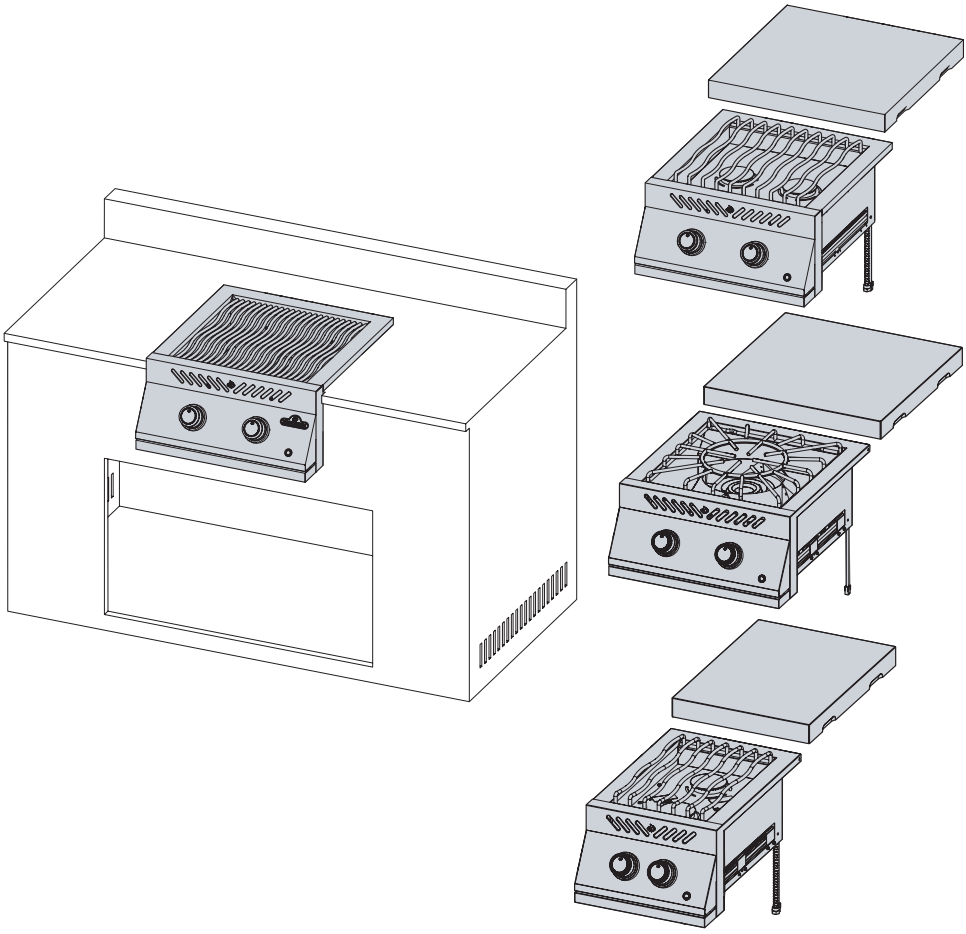

N415-0602.indd 16 3/19/2021 5:06:39 PM

1

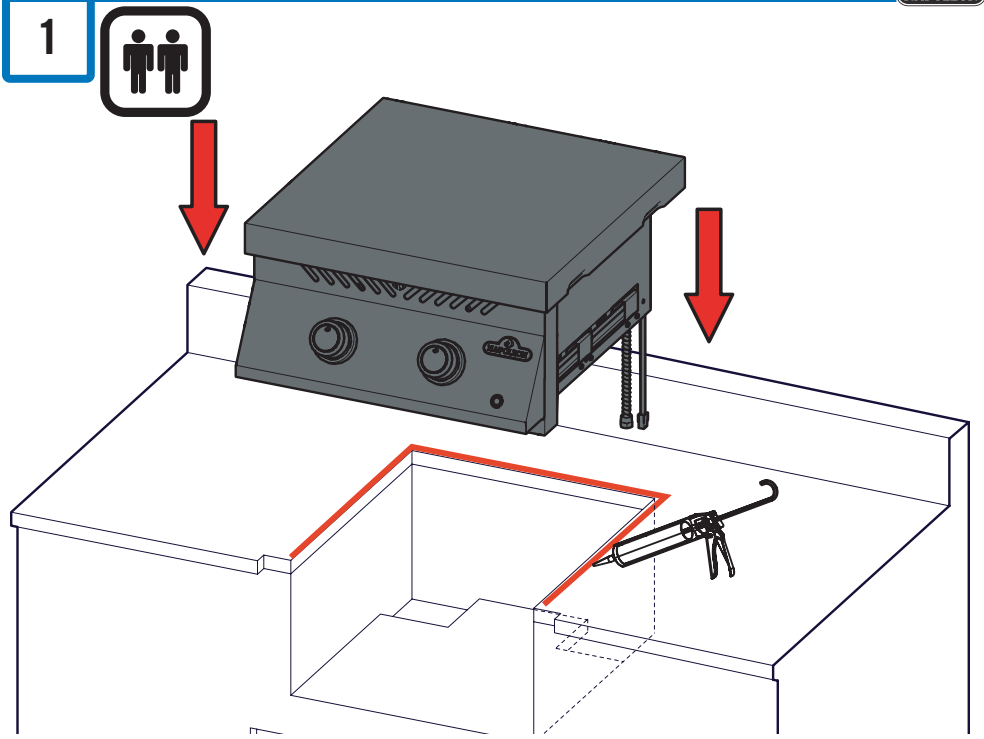

2

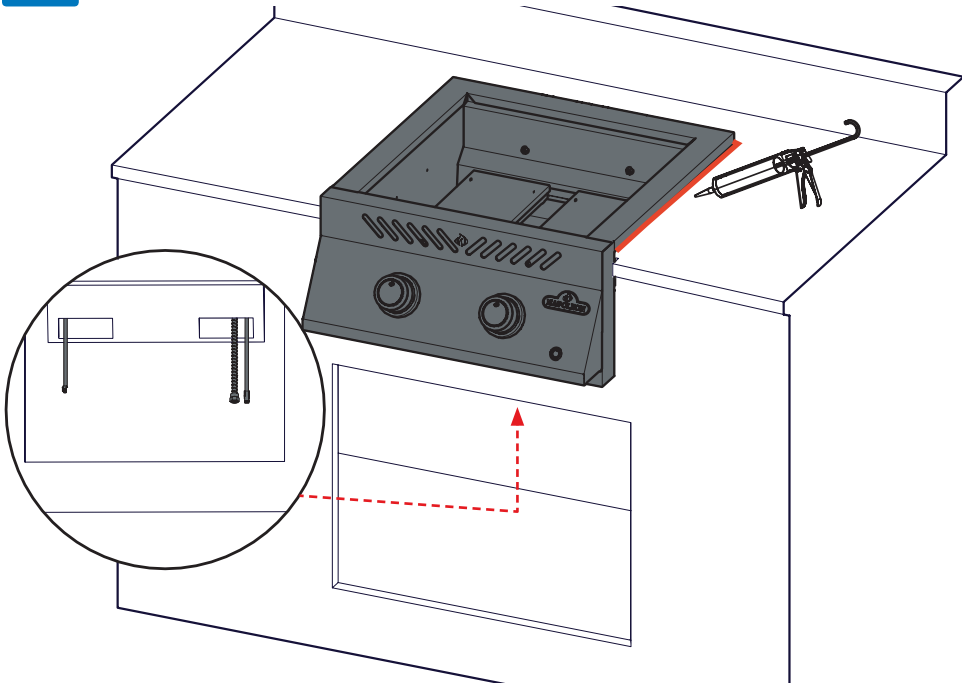

N415-0602.indd 17 3/19/2021 5:06:39 PM

3

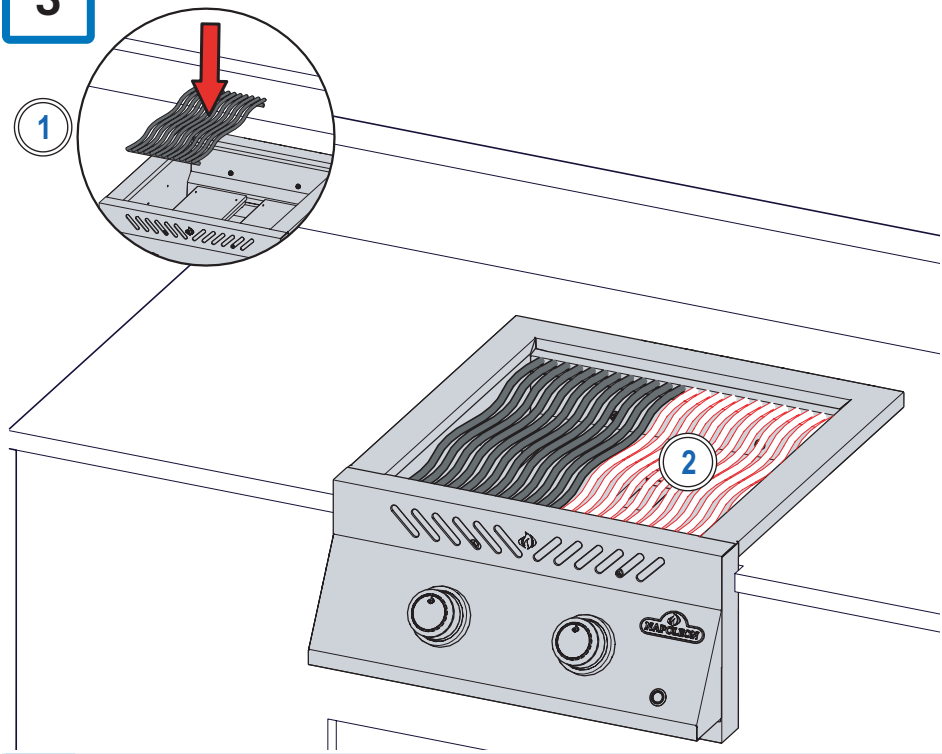

4

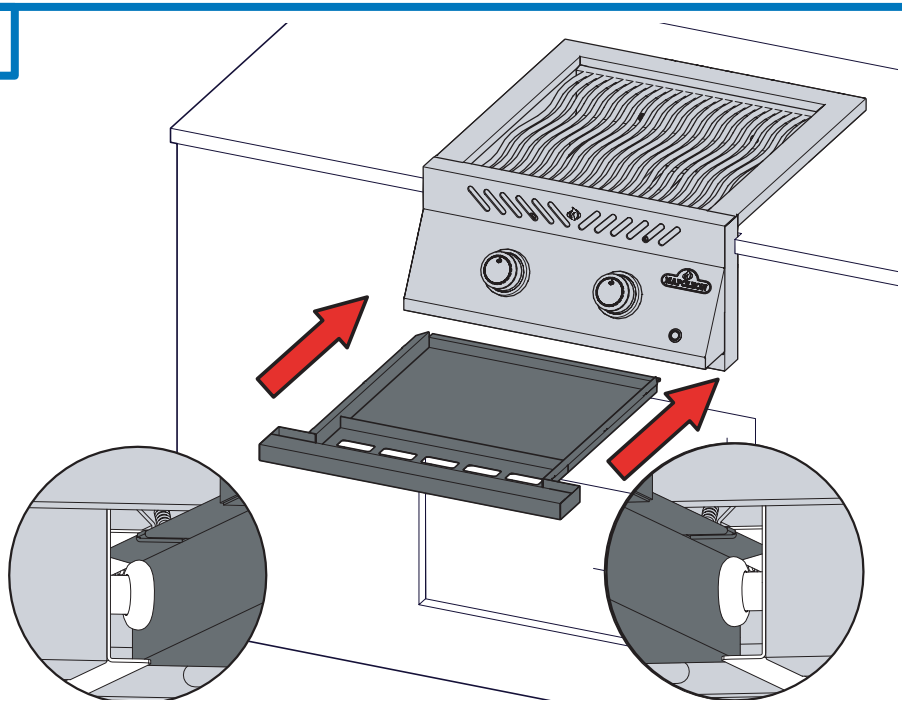

N415-0602.indd 18 3/19/2021 5:06:39 PM

5

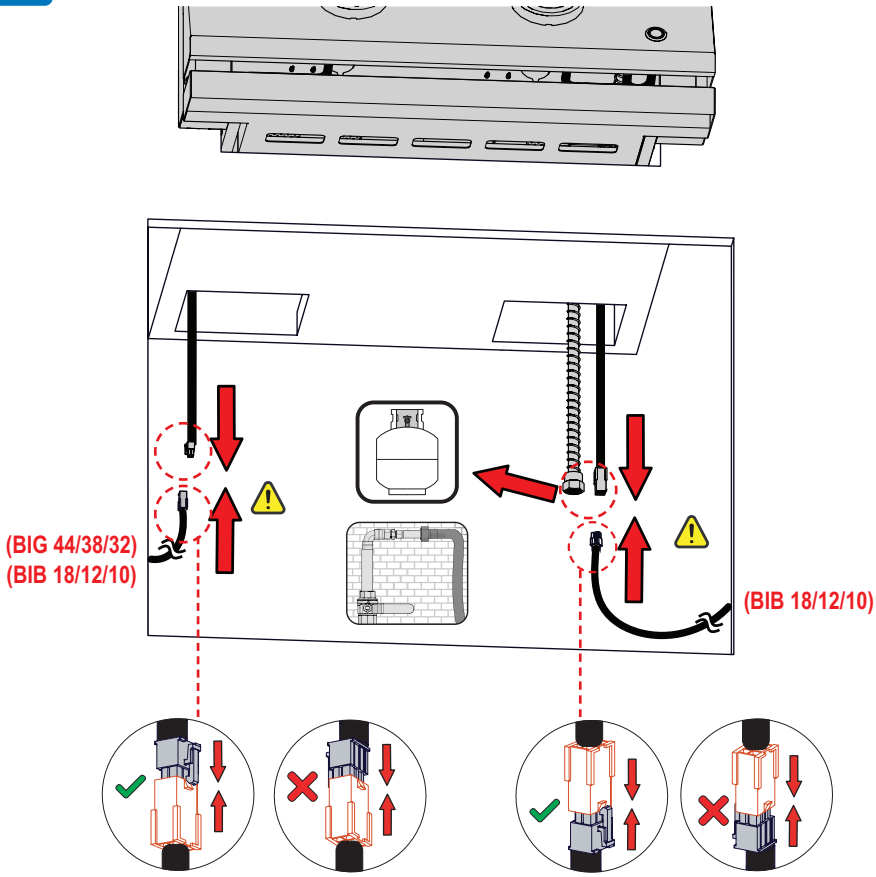

N415-0602.indd 19
3/19/2021 5:06:39 PM

6

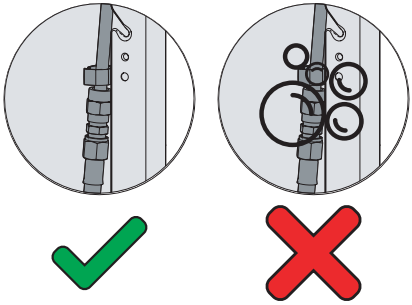

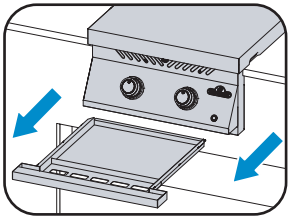

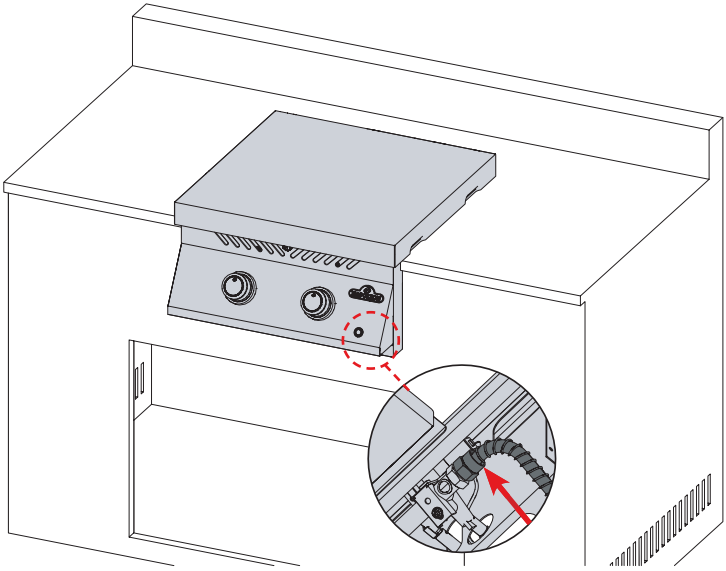

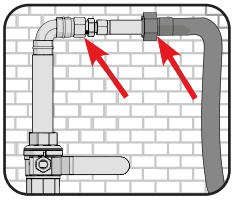

N415-0602.indd 20 3/19/2021 5:06:40 PM

BIB 10 RT BIB 10 IR

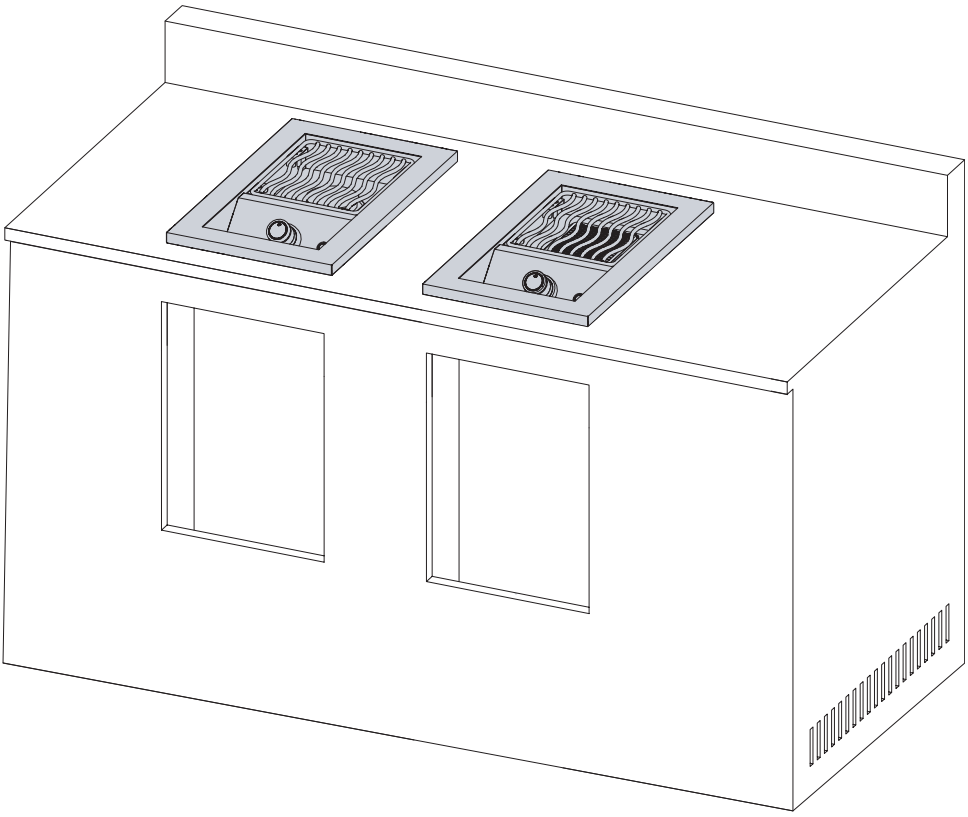

N415-0602.indd 21 3/19/2021 5:06:40 PM

1

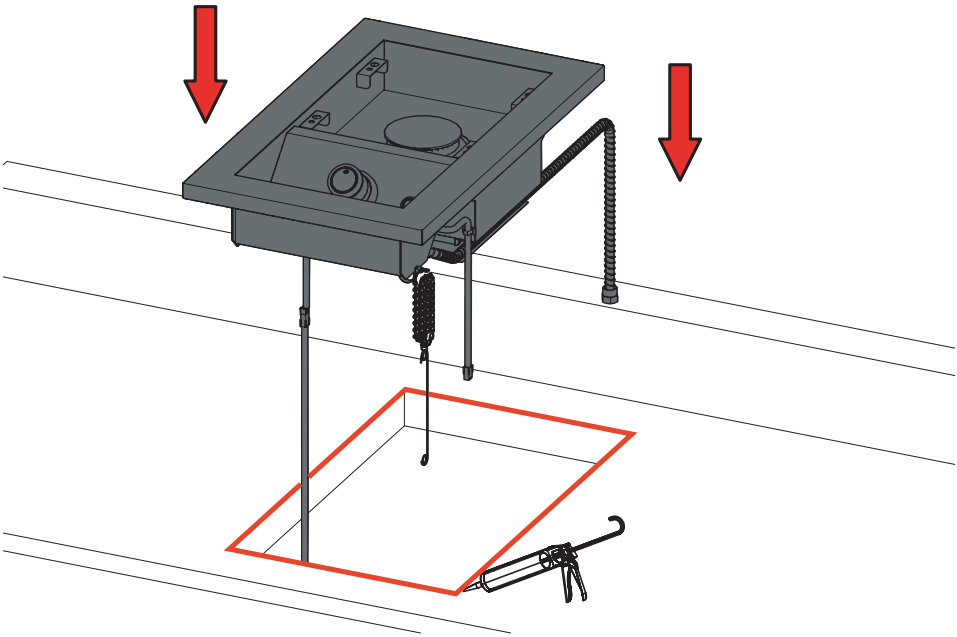

2

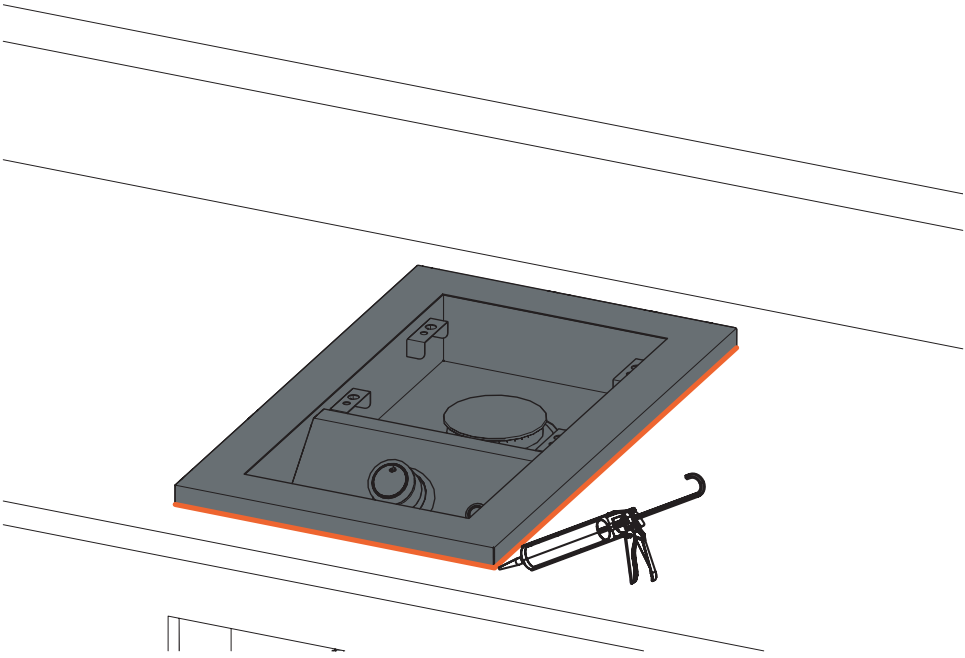

N415-0602.indd 22 3/19/2021 5:06:40 PM

3

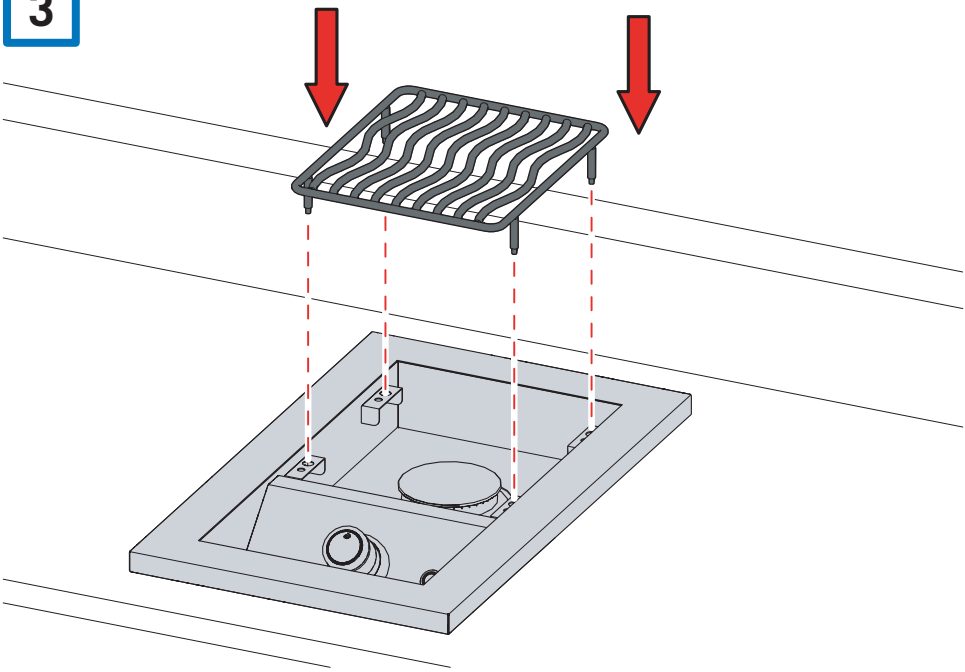

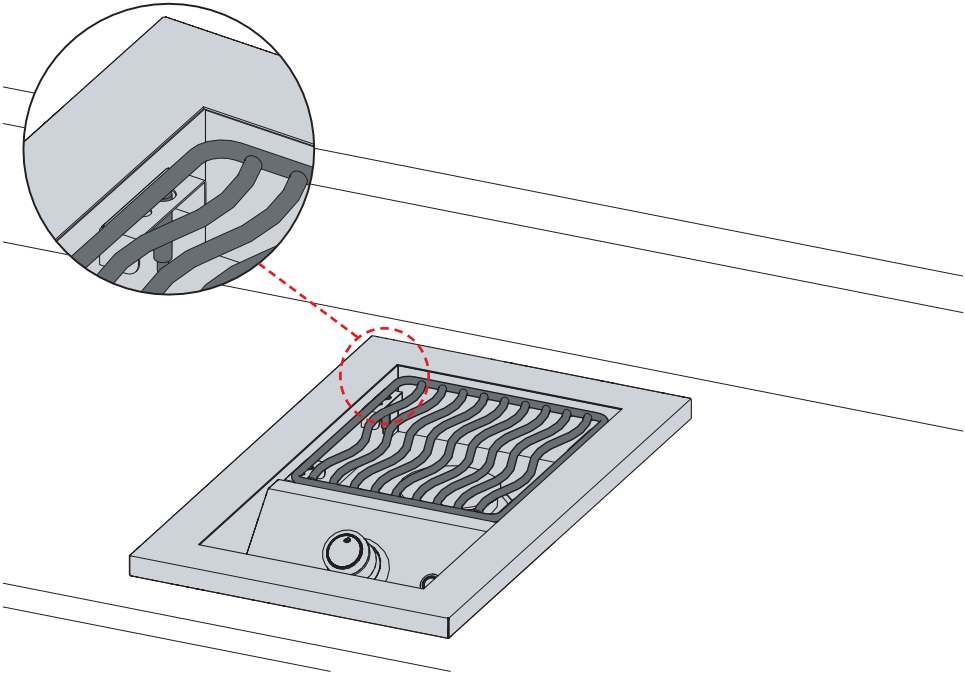

N415-0602.indd 23 3/19/2021 5:06:41 PM

4

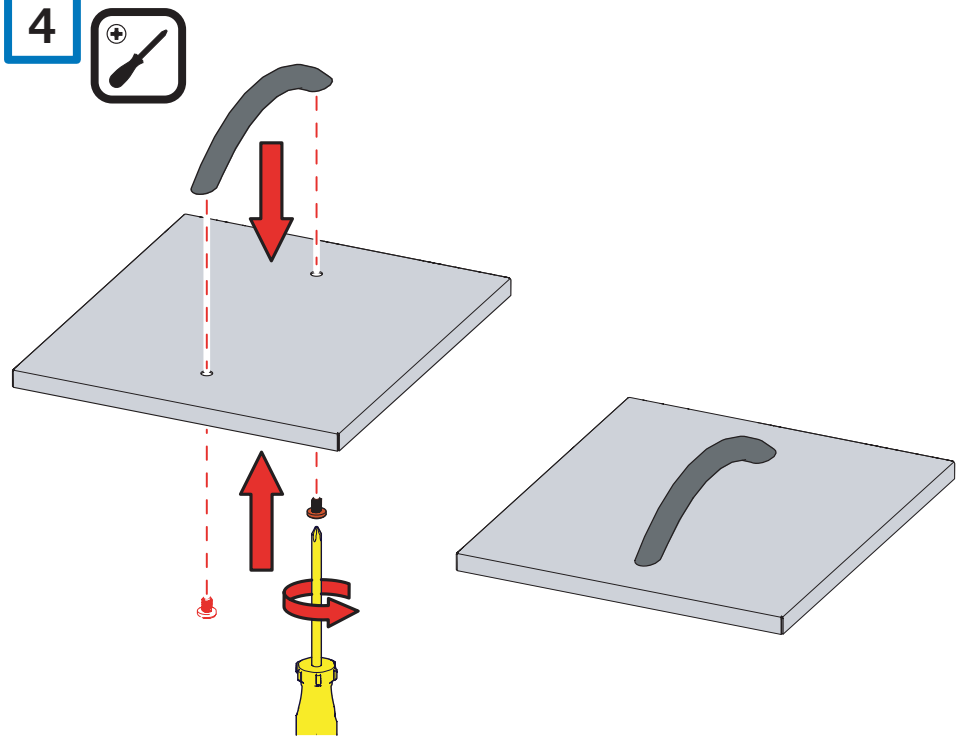

5

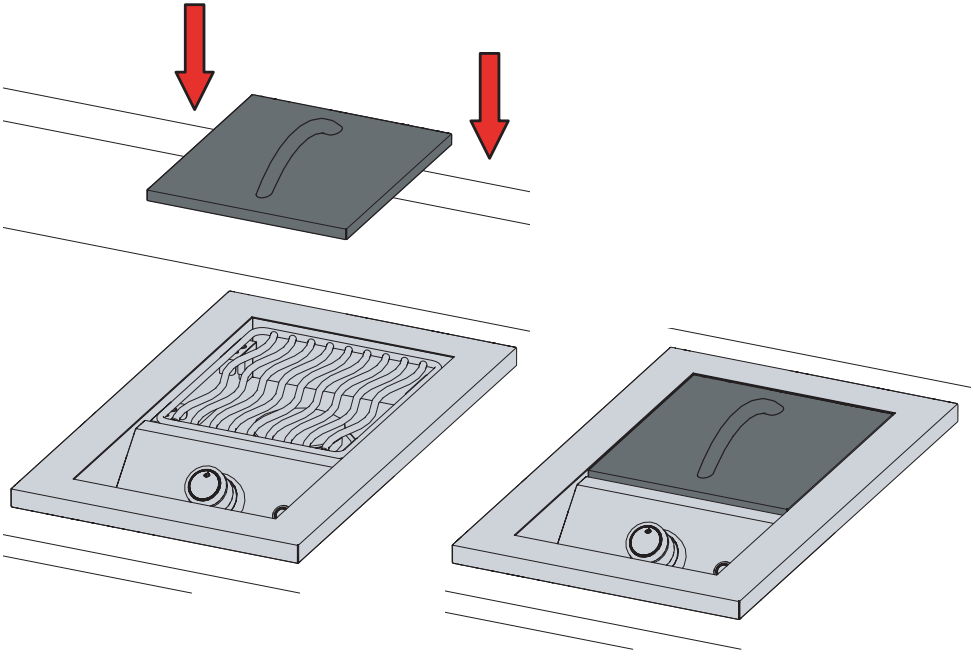

N415-0602.indd 24 3/19/2021 5:06:41 PM

6

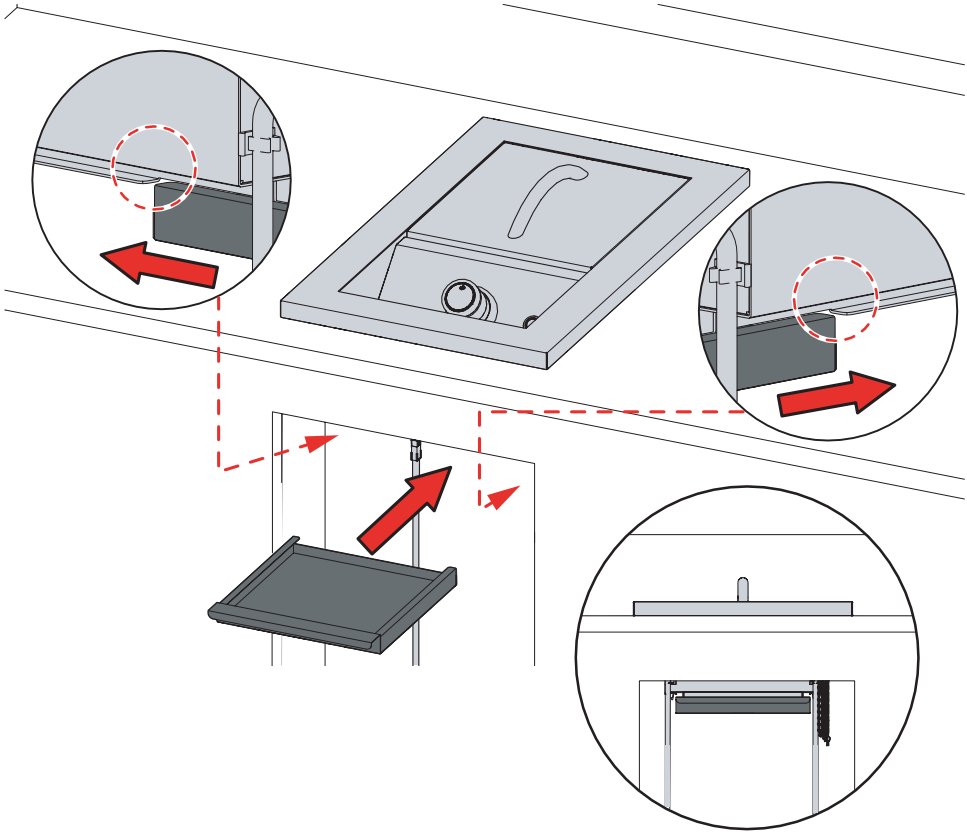

7

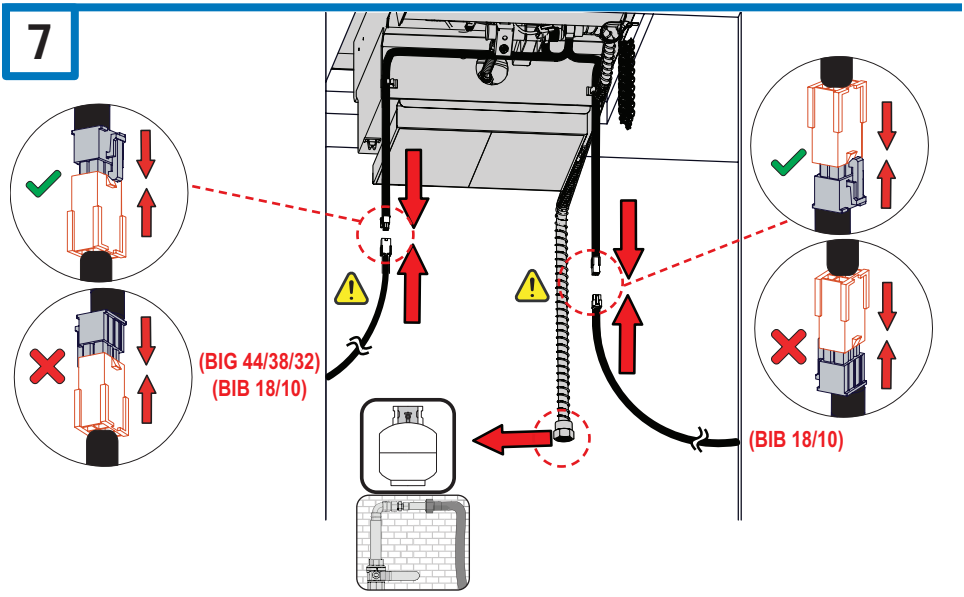

N415-0602.indd 25
3/19/2021 5:06:42 PM

8

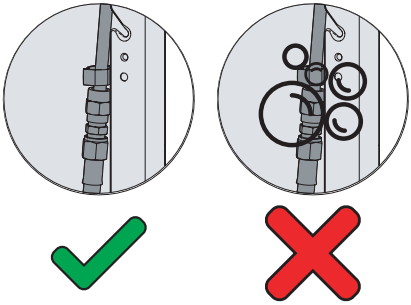

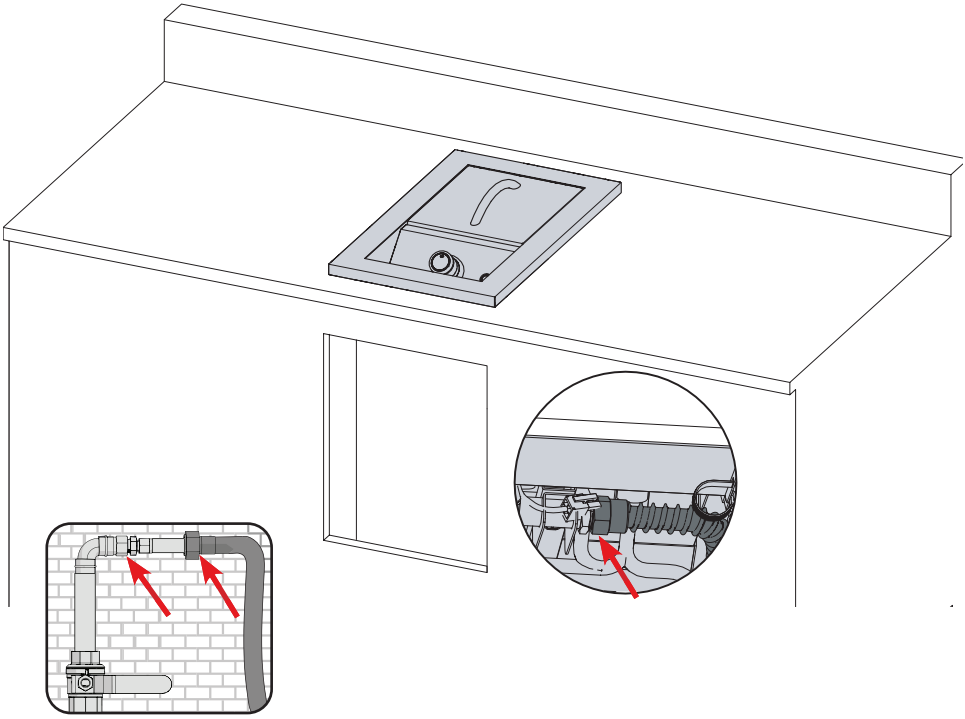

N415-0602.indd 26 3/19/2021 5:06:42 PM

N415-0602.indd 27 3/19/2021 5:06:42 PM

BIG 32 BIG 38 BIG 44

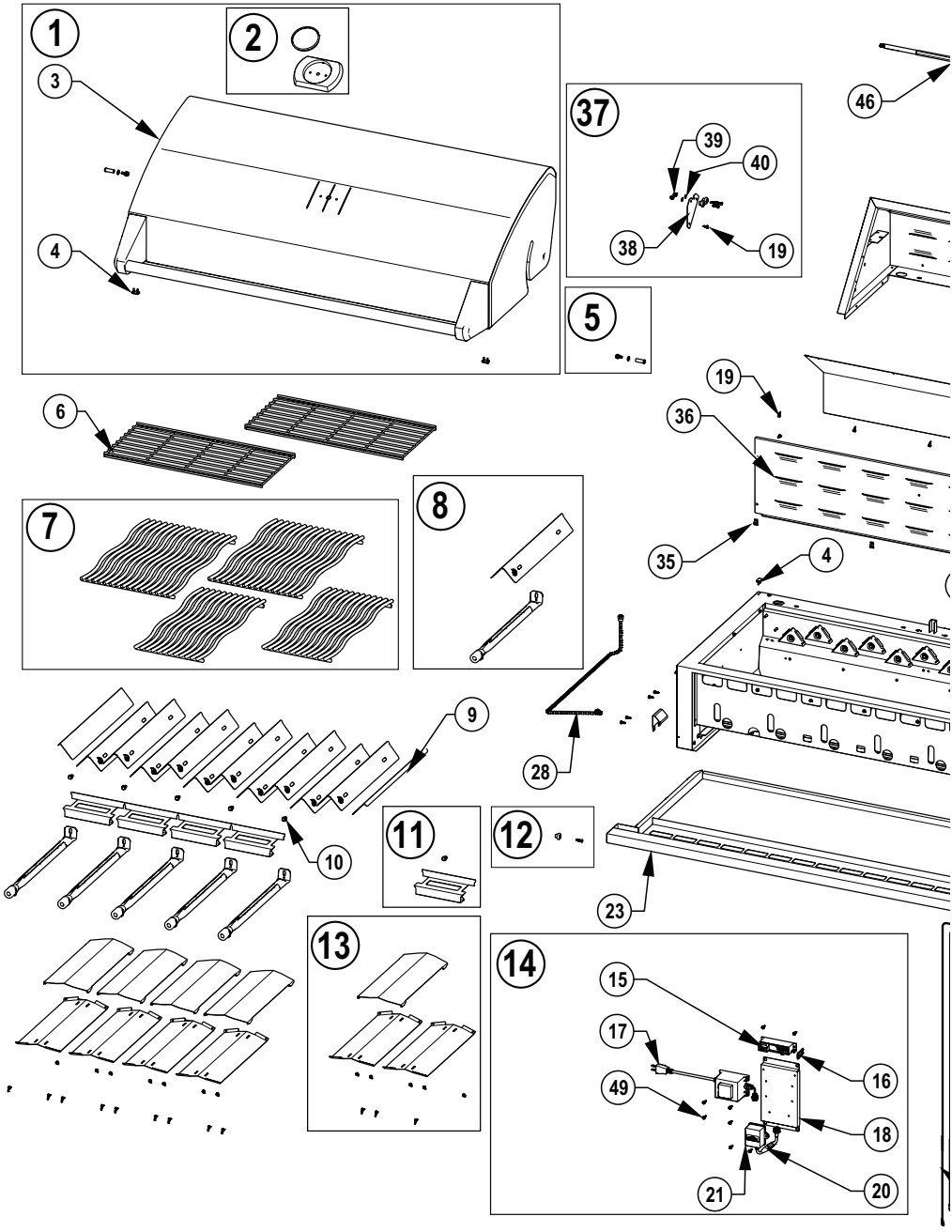

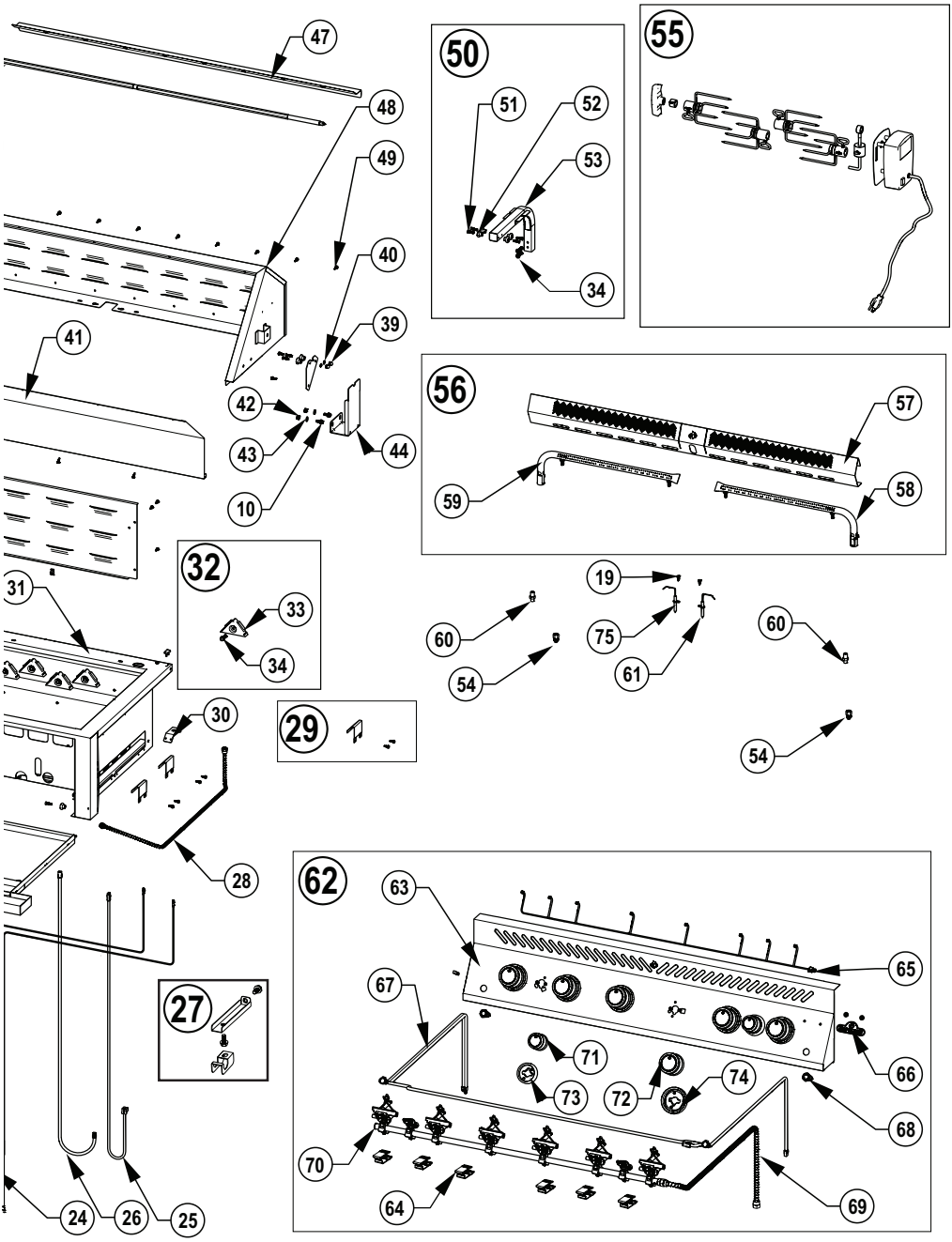
47
48
49
40
39
41
42
43
44
10
50
51
52
53
34
55
56
57
58
59
32
33
34
31
30
29
19
60
75
61
60
54
54
28
27
62
63
65
67
71
66
73
72
74
68
70
64
69
24
26
25

	Part #	BIG32	BIG38	BIG44
1	N010-1337	x		
	N010-1338		x	
	N010-1339			x
2	S91009	x	x	x
3	N010-1340	x		
	N010-1341		x	
	N010-1342			x
4	N510-0013	x	x	x
5	N370-1026-SER	x	x	x
6	N520-0052	x		
	N520-0053		x	
	N520-0054			x
7	S83028	x		
	S83029		x	
	S83030			x
8	S87019	x	x	x
9	N305-0119		x	x
	N305-0122	x		
10	N570-0038	x	x	x
11	S87018	x	x	x
12	N370-1021-SER	x	x	x
13	N370-1030-SER	x	x	x
14	N370-1016-SER	x	x	x
15	N357-0022	x	x	x
16	N750-0034	x	x	x
17	N707-0019	x	x	x
18	N475-0532	x	x	x
19	N570-0008	x	x	x
20	N750-0086	x	x	x
21	N190-0007	x	x	x
23	N010-1329	x		
	N010-1330		x	
	N010-1331			x
24	N750-0038	x	x	x
25	N750-0088	x	x	x
26	N750-0087	x	x	x
27	N010-1387-SER	x	x	x
28	N720-0084	x	x	
	N720-0082			x
29	N080-0462-SER	x	x	x
30	N080-0458	x	x	x
31	N010-1317-SER	x		
	N010-1318-SER		x	
	N010-1319-SER			x
32	N370-0822	x	x	x
33	N080-0405	x	x	x
34	N570-0087	x	x	x
35	N370-1027-SER	x	x	x
36	N035-0171	x		
	N035-0172		x	

	Part #	BIG32	BIG38	BIG44
	N035-0173			x
37	N370-1031-SER	x	x	x
38	N080-0459	x	x	x
39	N450-0052	x	x	x
40	N735-0010	x	x	x
41	N585-0153-BK2GL	x		
	N585-0154-BK2GL		x	
	N585-0155-BK2GL			x
42	N450-0008	x	x	x
43	N735-0003	x	x	x
44	N475-0509	x	x	x
46	N555-0098	x	x	
	N555-0099	x		
	N555-0100		x	
	N555-0101			x
	N555-0105			x
47	N215-0022	x		
	N215-0023		x	
	N215-0024			x
48	N010-1334	x		
	N010-1335		x	
	N010-1336			x
49	N570-0013	x	x	x
50	N370-1022-SER			x
51	N570-0134	x	x	x
52	N045-0001	x	x	x
53	N010-1369			x
54	N255-0071	x	x	x
55	N370-1002	x	x	
	N370-1003			x
56	N370-1039-SER	x	x	
	N370-1040-SER			x
57	N350-0069	x	x	
	N350-0090			x
58	N100-0045	x	x	x
59	N100-0063			x
60	W456-0050	n	n	n
	N455-0055	p	p	p
61	N240-0034	x	x	x
62	N010-1381-SER	n		
	N010-1382-SER	p		
	N010-1383-SER		n	
	N010-1384-SER		p	
	N010-1385-SER			n
	N010-1386-SER			p
63	N475-0511	x		
	N475-0512		x	
	N475-0513			x
64	N160-0048	x	x	x
65	N750-0090	x		

N415-0602.indd 30 3/19/2021 5:06:43 PM

	Part #	BIG32	BIG38	BIG44
	N750-0092		x	
	N750-0094			x
66	N385-0307-SER	x	x	x
67	N750-0089	x		
	N750-0091		x	
	N750-0093			x
68	N660-0005	x	x	x
69	N720-0070	x	x	x
70	N010-1343	p		
	N010-1344	n		
	N010-1345		p	
	N010-1346		n	
	N010-1347			p
	N010-1348			n
71	N380-0034-CL	x	x	x
72	N380-0035-CL	x	x	x
73	N010-1314	x	x	x
74	N010-1313	x	x	x
75	N240-0044			x
	BI-3623-ZCL	ac		
	BI-4223-ZCL		ac	
	BI-4823-ZCL			ac
	61830	ac		
	61836		ac	
	61842			ac
	69851			ac

x- standard part
p- propane
n- natural
ac- accessory

x- standard
p- propane
n- gaz naturel
ac- accessoire

x- standard
p- propano
n- gas natural
ac- accesorio

N415-0602.indd 31 3/19/2021 5:06:43 PM

BIB 18 IR

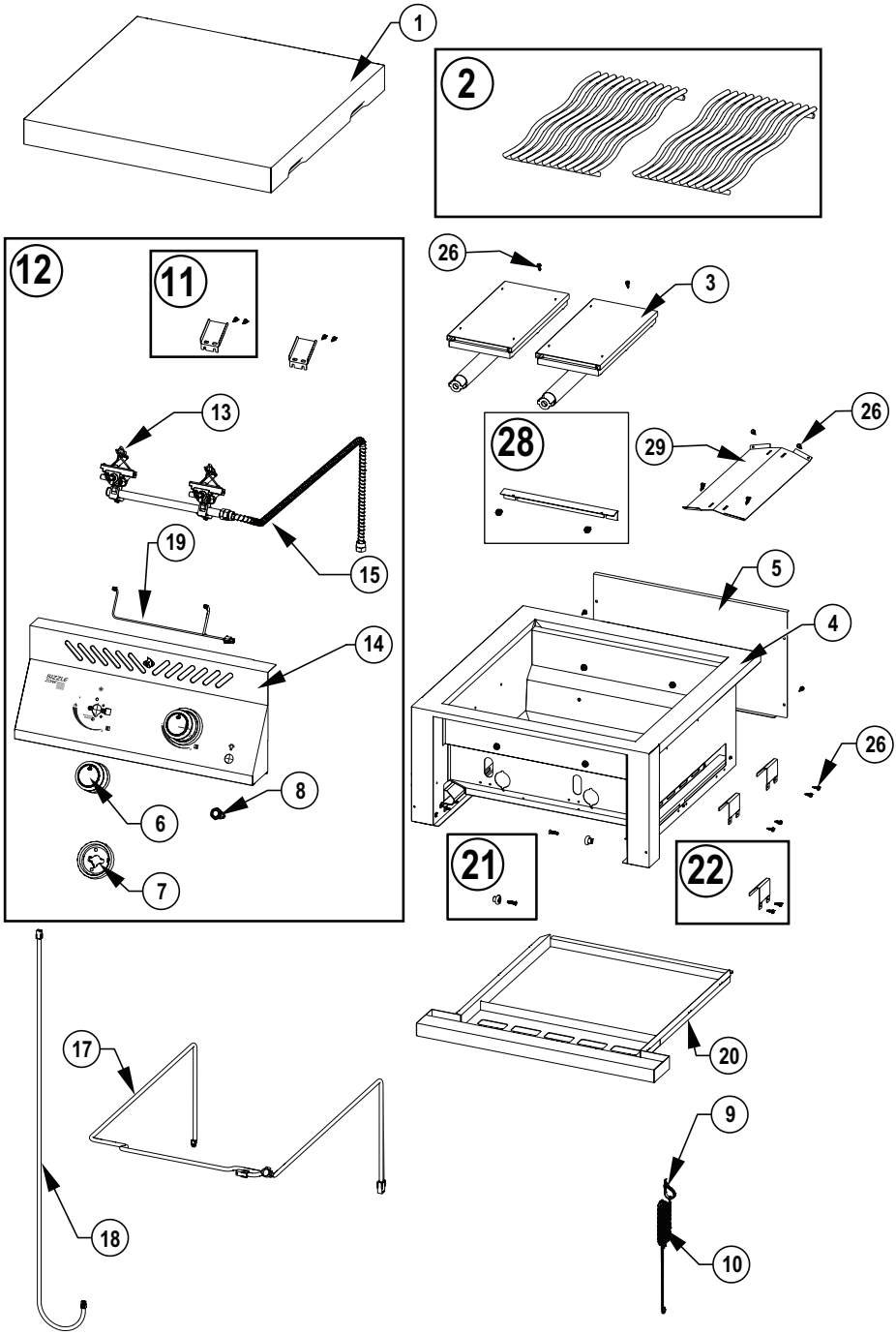

BIB 18 RT

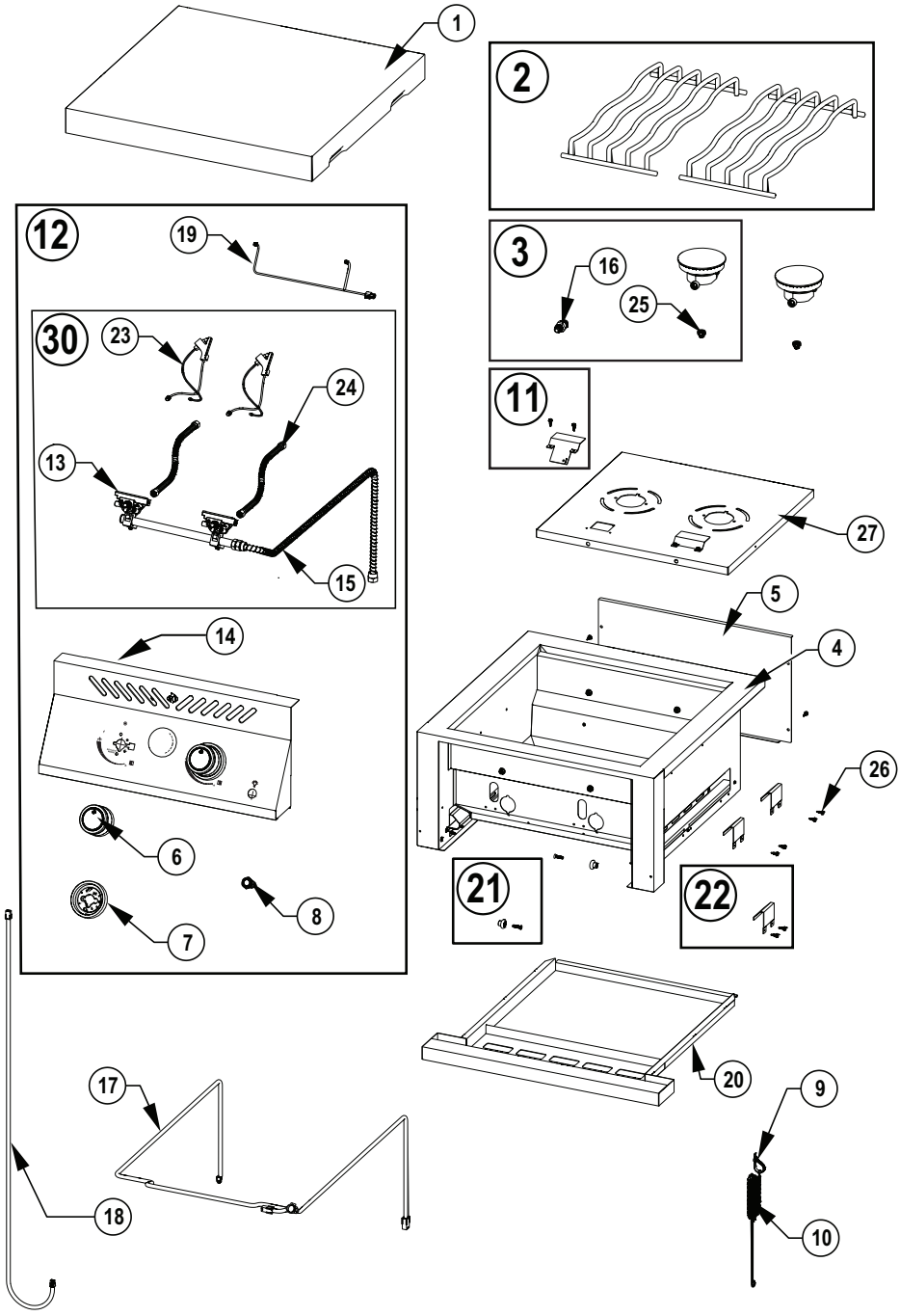

N415-0602.indd 33 3/19/2021 5:06:44 PM

BIB 18 PB

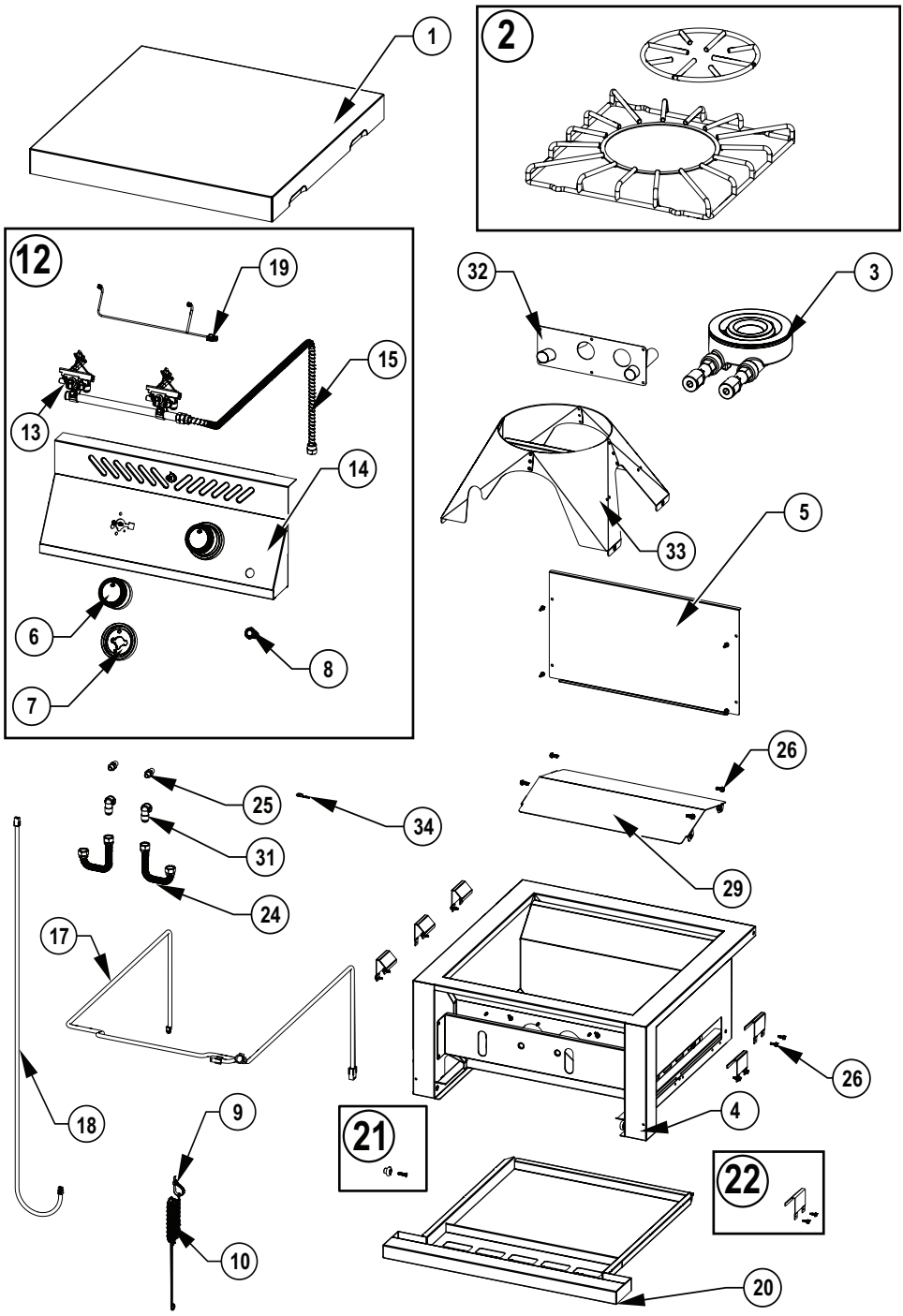

N415-0602.indd 34 3/19/2021 5:06:44 PM

	Part #	BIB18IR	BIB18RT	BIB18PB
1	N335-0137	x	x	x
2	S83033	x		
	S83032		x	
	S83034			x
3	N010-0897	x		
	S81010		n	
	S81011		p	
	N100-0064			x
4	N010-1323	x		
	N010-1396		x	
	N010-1320			x
5	N035-0165	x	x	x
6	N380-0035-CL	x	x	x
7	N010-1313	x	x	x
8	N660-0005	x	x	x
9	N640-0006	x	x	x
10	N555-0097	x	x	x
11	N080-0450-SER	x		
	N080-0451-SER		x	
12	N010-1391-SER		n	
	N010-1392-SER		p	
	N010-1393-SER	n		
	N010-1394-SER	p		
	N010-1481-SER			n
	N010-1482-SER			p
13	N010-1352		n	
	N010-1351		p	
	N010-1350	n		
	N010-1349	p		
	N010-1446			n
	N010-1447			p
14	N475-0514	x		
	N475-0510		x	
	N475-0516			x
15	N720-0070	x	x	x
16	N255-0069		x	
17	N750-0095	x	x	x
18	N750-0087	x	x	x
19	N750-0096	x	x	x
20	N010-1332	x	x	x
21	N370-1021-SER	x	x	x
22	N080-0462-SER	x	x	x
23	N357-0025		p	
	N357-0026		n	
24	N720-0083		x	
	N720-0086			x
25	N455-0108		n	
	N455-0107		p	
	N455-0117			n
	N455-0118			n
	N455-0119			p
	N455-0120			p
26	N570-0008	x	x	x
27	N035-0156		x	
28	N655-0214-SER	x		
29	N585-0162	x		
	N585-0161			x
30	N370-1028-SER		n	
	N370-1029-SER		p	
31	W255-0004			x
32	N010-1448			x
33	N010-1333			x
34	N485-0012			x
	BI-2423-ZCL	ac	ac	ac

x- standard part
p- propane
n- natural
ac- accessory

x- standard
p- propane
n- gaz naturel
ac- accessoire

x- standard
p- propano
n- gas natural
ac- accesorio

N415-0602.indd 35 3/19/2021 5:06:44 PM

BIB 12RT

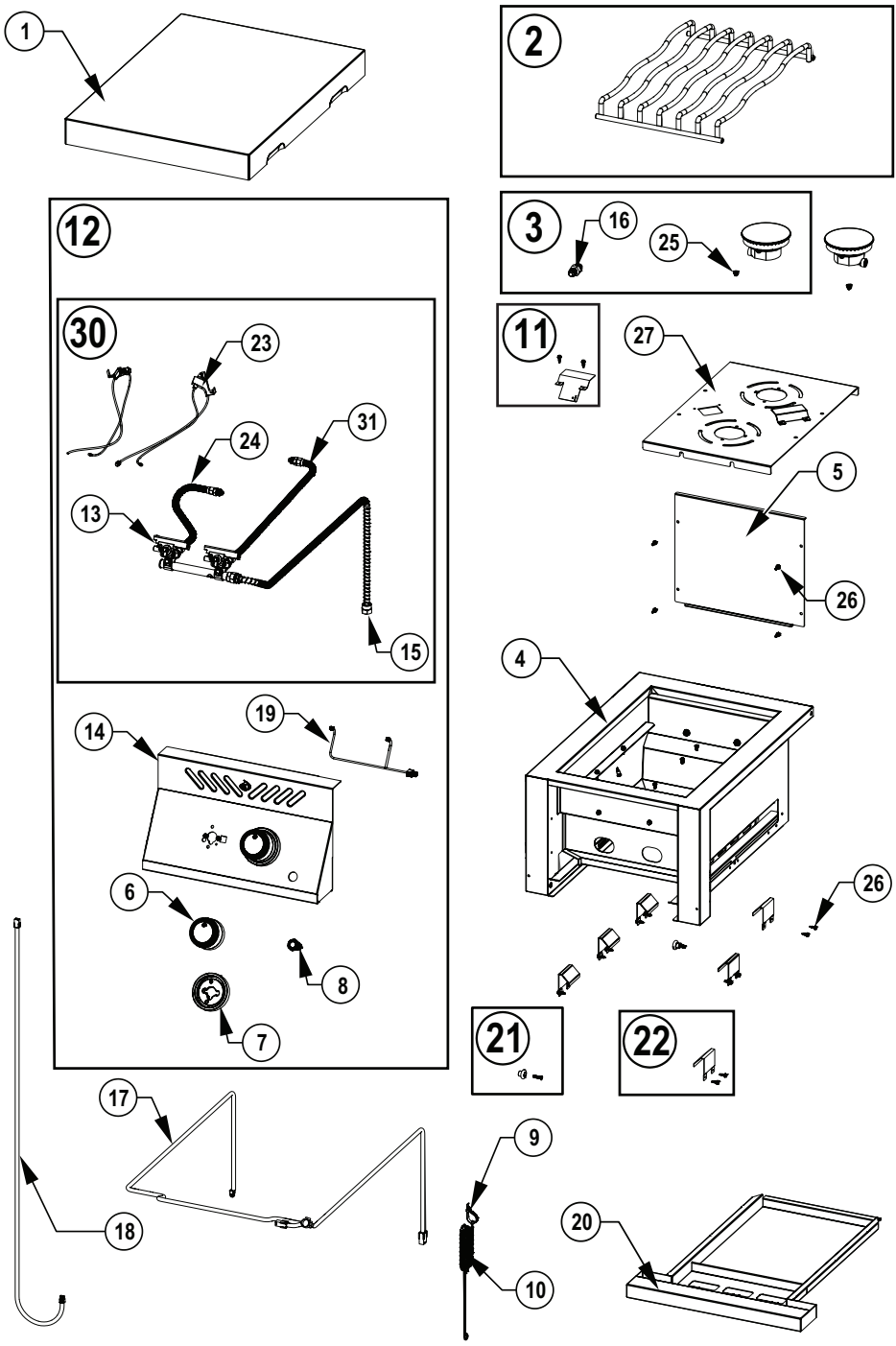
1
2
3
16
25
12
30
23
24
31
13
15
11
27
5
26
4
19
14
6
8
7
26
21
22
17
9
18
20
10

	Part #	BIB12RT
1	N335-0145	x
2	S83035	x
3	S81010	n
	S81011	p
4	N010-1449	x
5	N035-0179	x
6	N380-0035-CL	x
7	N010-1313	x
8	N660-0005	x
9	N640-0006	x
10	N555-0097	x
11	N080-0451-SER	x
12	N010-1483-SER	n
	N010-1484-SER	p
13	N010-1451	n
	N010-1452	p
14	N475-0573	x
15	N720-0070	x
16	N255-0069	x
17	N750-0104	x
18	N750-0087	x
19	N750-0105	x
20	N010-1453	x
21	N370-1021-SER	x
22	N080-0462-SER	x
23	N357-0028	n
	N357-0029	p
24	N720-0083	x
25	N455-0108	n
	N455-0107	p
26	N570-0008	x
27	N035-0180	x
30	N370-1065-SER	n
	N370-1066-SER	p
31	N720-0060	x
	BI-1823-ZCL	ac

x- standard part
p- propane
n- natural
ac- accessory

x- standard
p- propane
n- gaz naturel
ac- accessoire

x- standard
p- propano
n- gas natural
ac- accesorio

N415-0602.indd 37 3/19/2021 5:06:45 PM

BIB 10 IR

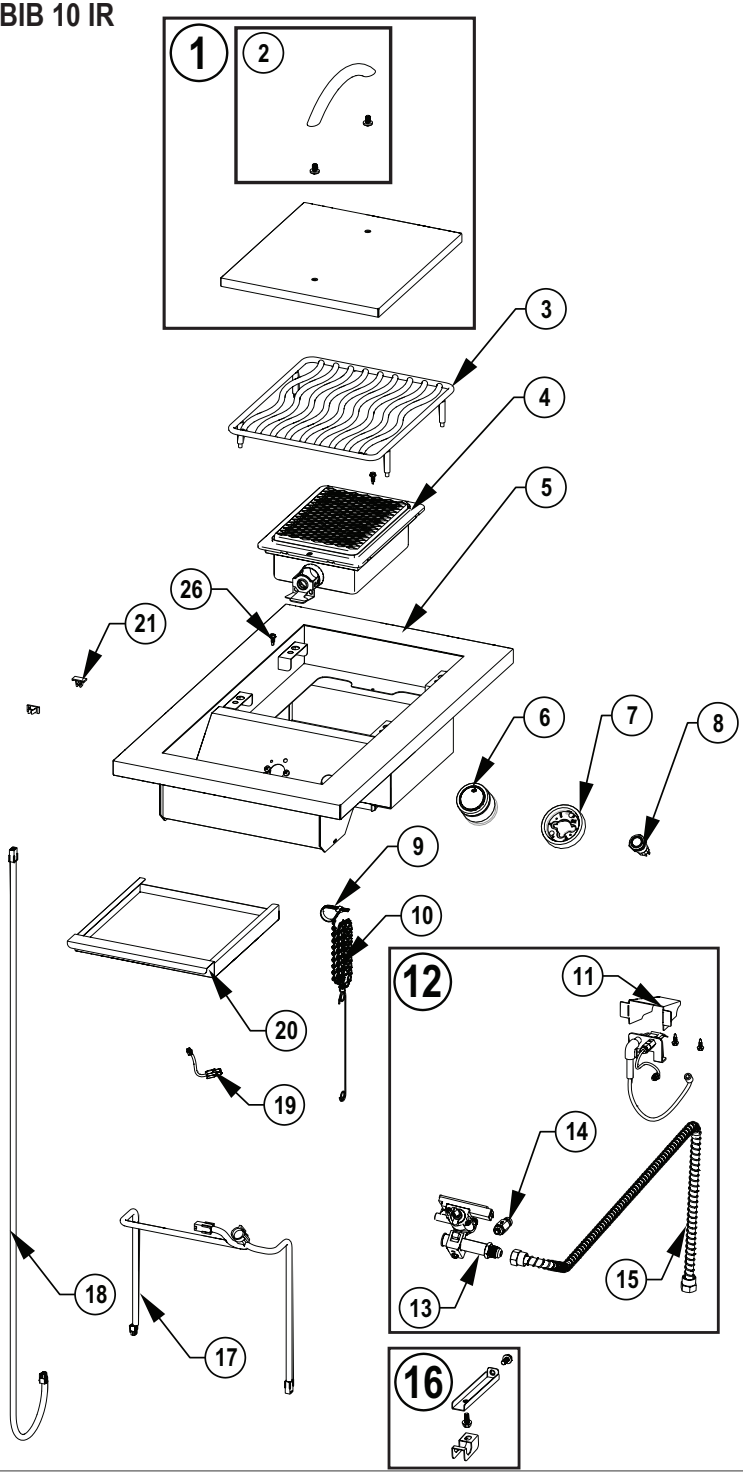

BIB 10 RT

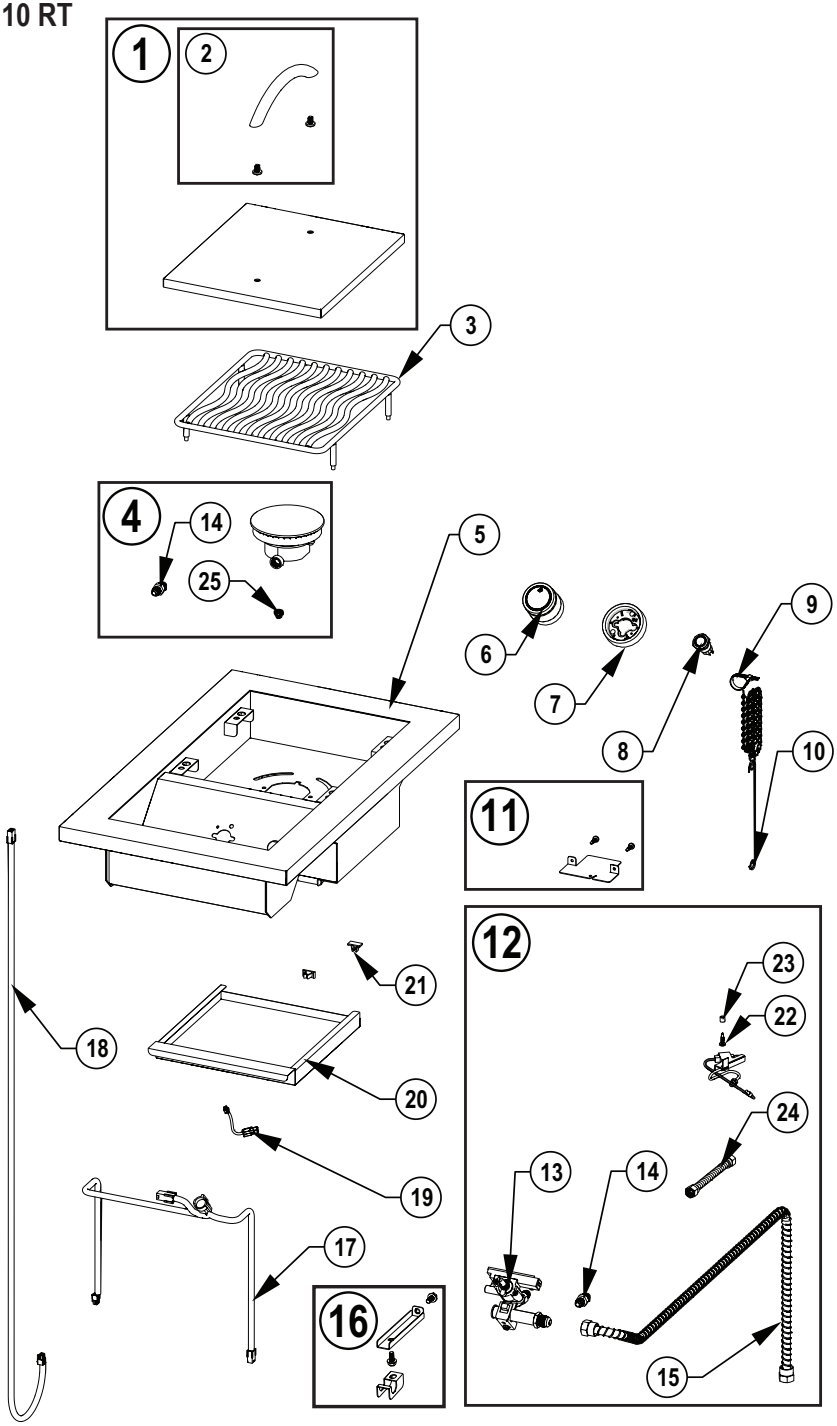

N415-0602.indd 39 3/19/2021 5:06:45 PM

	Part #	BIB10IR	BIB10RT
1	N010-1380	x	x
2	N325-0049-SER	x	x
3	S83031	x	x
4	S81004	x	
	S81008		n
	S81009		p
5	N010-1322	x	x
6	N380-0034-CL	x	x
7	N010-1314	x	x
8	N660-0005	x	x
9	N640-0006	x	x
10	N555-0097	x	x
11	N215-0025	x	
	N080-0454-SER		x
12	N370-1032-SER		n
	N370-1033-SER		p
	N370-1034-SER	n	
	N370-1035-SER	p	
13	N010-1356		n
	N010-1355		p
	N010-1354	n	
	N010-1353	p	
14	N255-0069		x
	N455-0115	n	
	N455-0116	p	
15	N720-0070	x	x
16	N010-1387-SER	x	x
17	N750-0099	x	x
18	N750-0087	x	x
19	N750-0100	x	x
20	N710-0130	x	x
21	N370-1027-SER	x	x
22	N570-0013		x
23	W615-0043		x
24	N720-0085		x
25	N455-0106		n
	N455-0105		p
26	N570-0008	x	

x- standard part
p- propane
n- natural
ac- accessory

x- standard
p- propane
n- gaz naturel
ac- accessoire

x- standard
p- propano
n- gas natural
ac- accesorio

N415-0602.indd 40 3/19/2021 5:06:45 PM

BIG44RB, BIG38RB, BIG32RB

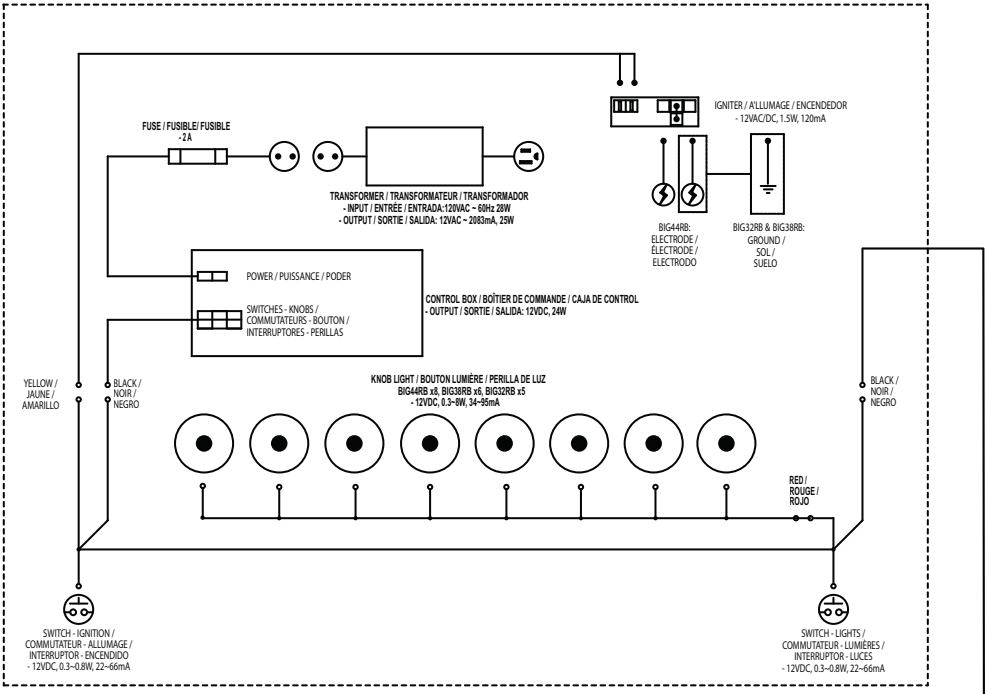

BIB18, BIB12, BIB10

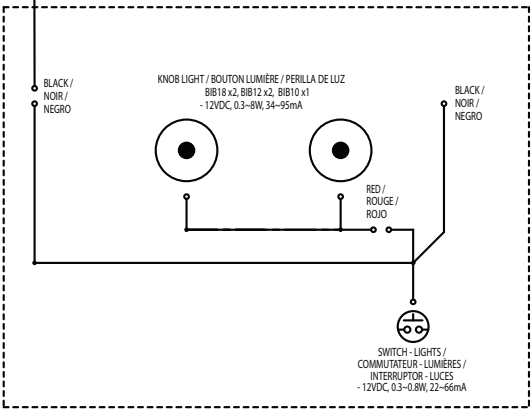

N415-0602.indd 41
3/19/2021 5:06:45 PM