/ Perfect Charging / Perfect Welding / **Solar Energy**

Fronius Symo GEN24 6.0 Plus / 8.0 Plus / 10.0 Plus

EN

Operating instructions

Grid-connected inverter

42,0426,0315,EN 009-16022021

Contents

EN

Safety rules

Explanation of safety notices

⚠ WARNING!

Indicates a potentially hazardous situation.
▶ If not avoided, death or serious injury may result.

⚠ CAUTION!

Indicates a situation where damage could occur.
▶ If not avoided, minor injury and/or damage to property may result.

NOTE!

Indicates a risk of flawed results and possible damage to the equipment.

If you see any of the symbols depicted in the "Safety rules" chapter, special care is required.

Safety

⚠ CAUTION!

Danger from crushing due to the incorrect handling of attachments and connection parts.
Injuries to limbs may result.
▶ When lifting up, putting down, and attaching the inverter, use the integrated grips.
▶ When fitting attachments, ensure that no limbs are located between the attachment and the inverter.
▶ Do not hold onto the terminals when locking and unlocking.

General

The device has been manufactured in line with the state of the art and according to recognised safety standards. In the event of incorrect operation or misuse, there is a risk of
- Injury or death to the operator or a third party
- Damage to the device and other material assets belonging to the operating company

All personnel involved in commissioning, maintenance, and servicing of the device must:
- Be suitably qualified
- Have knowledge of and experience in dealing with electrical installations
- Have fully read and precisely followed these Operating Instructions

In addition to the Operating Instructions, all applicable local rules and regulations regarding accident prevention and environmental protection must also be followed.

All safety and danger notices on the device:
- Must be kept in a legible state
- Must not be damaged
- Must not be removed
- Must not be covered, pasted, or painted over

Only operate the device when all protection devices are fully functional. If the protection devices are not fully functional, there is a danger of
- Injury or death to the operator or a third party
- Damage to the device and other material assets belonging to the operating company

Any safety devices that are not fully functional must be repaired by an authorized specialist before the device is switched on.

Never bypass or disable protection devices.

For the location of the safety and danger notices on the device, refer to the chapter headed "Warning notices on the device" in the Operating Instructions for your device.

Faults that could compromise safety must be remedied before switching on the device.

Environmental conditions

Operation or storage of the device outside the stipulated area will be deemed as not in accordance with the intended purpose. The manufacturer accepts no liability for any damage resulting from improper use.

Qualified personnel

The servicing information contained in these operating instructions is intended only for the use of qualified service engineers. An electric shock can be fatal. Do not carry out any actions other than those described in the documentation. This also applies to qualified personnel.

All cables and leads must be secured, undamaged, insulated and adequately dimensioned. Loose connections, scorched, damaged or inadequately dimensioned cables and leads must be immediately repaired by authorised personnel.

Maintenance and repair work must only be carried out by an authorised specialist.

It is impossible to guarantee that bought-in parts are designed and manufactured to meet the demands made on them, or that they satisfy safety requirements. Use only original spare parts (also applies to standard parts).

Do not carry out any alterations, installations, or modifications to the device without first obtaining the manufacturer's permission.

Components that are not in perfect condition must be changed immediately.

Noise emission values

The sound power level of the inverter is specified in the **Technical data**.

The device is cooled as quietly as possible with the aid of an electronic temperature control system; this depends on the amount of converted power, the ambient temperature, the level of soiling of the device, etc.

It is not possible to provide a workplace-related emission value for this device because the actual sound pressure level is heavily influenced by the installation situation, the grid quality, the surrounding walls and the properties of the room in general.

EMC measures

In certain cases, even though a device complies with the standard limit values for emissions, it may affect the application area for which it was designed (e.g. when there is sensitive equipment at the same location, or if the site where the device is installed is close to either radio or television receivers). If this is the case, then the operator is obliged to take appropriate action to rectify the situation.

Backup power

This system has backup power functions. This enables a replacement power supply to be established in the event of a failure in the public grid.

Where an automatic backup power supply is installed, a **backup power warning notice** (https://www.fronius.com/en/search-page, item number: 42,0409,0275) must be fitted on the electrical distributor.

Maintenance and installation work in the home network requires both disconnection on the utility side and deactivation of the replacement power mode by opening the integrated DC disconnector on the inverter.

Depending on the insolation conditions and the battery state of charge, the backup power supply is automatically deactivated and activated. This can cause the backup power supply to unexpectedly return from standby mode. Therefore, installation work can only be performed on the home network when the backup power supply is deactivated.

Influencing factors on the total power in backup power mode:

Reactive power
Electrical loads with a power factor not equal to 1 also require reactive power in addition to effective power. The reactive power also loads the inverter. Therefore, to correctly calculate the actual total power, it is not the rated power of the load that is relevant, but the current caused by effective and reactive power.

Devices with a high reactive power are mainly electric motors such as:
- Water pumps
- Circular saws
- Blowers and fans

High starting current
Electrical loads that need to accelerate a large mass usually require a high starting current. This can be up to 10 times higher than the nominal current. The maximum current of the inverter is available for the starting current. Loads with too high starting currents therefore cannot be started/operated, even though the nominal power of the inverter suggests that they can. When dimensioning of the backup power circuit, the connected load power and any starting current must also be taken into account.

Devices with high starting currents are, for example:
- Devices with electric motors (e.g. lifting platform, circular saws, planing bench)
- Devices with large transmission ratio and flywheel mass
- Devices with compressors (e.g. compressed air compressors, air conditioning systems)

IMPORTANT!
Very high starting currents can cause short-term distortion or a drop in output voltage. The simultaneous operation of electronic devices in the same backup power supply system should be avoided.

Load unbalance
When dimensioning three-phase backup power networks, the total output power and the power output per phase of the inverter must be taken into account.

IMPORTANT!
The inverter may only be operated within the limits of its technical capabilities. Operation outside of its technical capabilities can cause the inverter to shut down.

Data protection

The user is responsible for the safekeeping of any changes made to the factory settings. The manufacturer accepts no liability for any deleted personal settings.

Copyright

Protective earthing (PE)

Connection of a point in the device, system or installation to earth to protect against electric shock in the event of a fault. When installing a safety class 1 inverter (see **Technical data**), the ground conductor connection is required.

When connecting the ground conductor, ensure that it is secured against accidental disconnection. All the points listed in the chapter **Connecting the inverter to the public grid (AC side)** on page **58** must be observed. It must be ensured that when using the strain relief devices, the ground conductor is the last to be connected in the event of a possible failure. When connecting the ground conductor, the minimum cross-section requirements specified by the respective national standards and guidelines must be observed.

General information

Fronius Symo GEN24

Device concept

The inverter transforms the direct current generated by the solar modules into alternating current. This alternating current is fed into the public grid and synchronized with the grid voltage in use. Moreover, the solar energy can also be stored in a connected battery for later use.

The inverter is intended for use in grid-connected photovoltaic systems. The inverter has backup power functions and switches to backup power mode if it has been wired accordingly*.

The inverter automatically monitors the public grid. Whenever conditions in the electric grid are inconsistent with standard conditions (for example, grid switch-off, interruption), the inverter will immediately stop producing power and interrupt the supply of power into the grid.
The grid is monitored by monitoring the voltage, frequency and islanding conditions.

After installation and commissioning, the inverter's operation is fully automatic;
the inverter draws the maximum possible power from the solar modules.
Depending on the operating point, this power is used in the home, stored in a battery**, or fed into the grid.

As soon as the energy provided by the solar modules is no longer sufficient, the power from the battery is fed into your home. Depending on the setting, power may also be obtained from the public grid in order to charge the battery**.

When its temperature gets too high, the inverter automatically reduces the output or charging power, or switches off completely, in order to protect itself.
Reasons for the temperature being too high include a high ambient temperature or insufficient heat dissipation (for example, inadequate heat dissipation when installed in switch cabinets).

* Only possible with Fronius GEN24 Plus inverters.
** With suitable battery and cabling.

Scope of supply

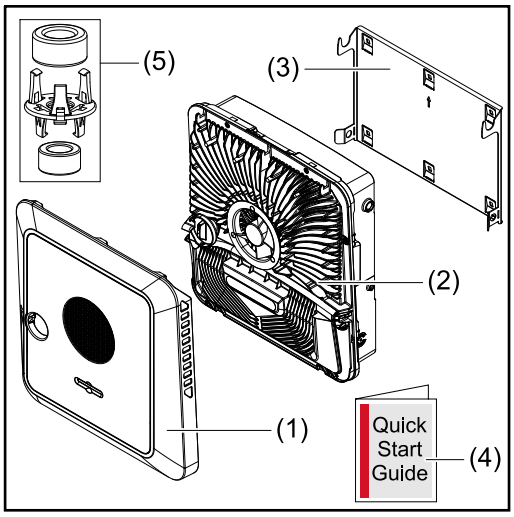

(1) Housing cover
(2) Inverter
(3) Mounting bracket (illustration)
(4) Quick Start guide
(5) 2x ferrite ring with holder

Intended use

The inverter is designed to convert direct current from solar modules into alternating current and feed this power into the public grid. A backup power mode is possible provided that appropriate cabling has been installed.

The following are considered improper use:
- Utilisation for any other purpose, or in any other manner
- Alterations to the inverter are not permitted unless expressly recommended by Fronius
- Installation of components is not permitted unless expressly recommended or sold by Fronius.

The manufacturer is not responsible for any damage resulting from improper use.
All warranty claims are considered void in such cases.

Intended use also means:
- Carefully reading and obeying all the instructions, as well as safety and danger notices in the Operating Instructions
- Installation in accordance with chapter "**Installation**" from page **45**.

When configuring the photovoltaic system, make sure that all components of the photovoltaic system are operating exclusively within their permissible operating range.

Observe all measures recommended by the solar module manufacturer to permanently maintain the solar module properties.

Observe the grid operator's regulations for energy fed into the grid and connection methods.

The Fronius GEN24 inverter is a grid-connected inverter with a backup power function – it is not a stand-alone inverter. The following restrictions must therefore be observed in backup power mode:
- Backup power mode may be in operation for at least 2000 hours
- Backup power mode may be in operation for more than 2000 operating hours if 20% of the duration of the inverter's grid power feed operation is not exceeded at the relevant time.

* Only possible with Fronius GEN24 Plus inverters.

Thermal concept

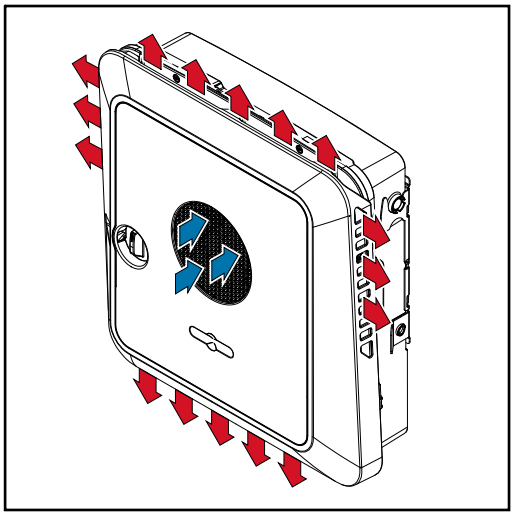

Ambient air is drawn in by the fan on the front side and blown out at the device sides. The even heat dissipation allows several inverters to be installed next to each other.

NOTE!

Risk due to insufficient cooling of the inverter.
This may result in a loss of power in the inverter.

- ▶ Do not block the fan (for example, with objects that protrude through the touch guard).
- ▶ Do not cover the ventilation slots, even partially.
- ▶ Make sure that the ambient air can always flow through the inverter's ventilation slots unimpeded.

The various operating modes

Operating modes – Explanation of symbols

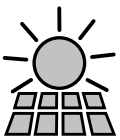

PV module
generates direct current

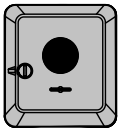

Fronius GEN24 inverter
converts direct current into alternating current and charges the battery (battery charging is only possible with Fronius GEN24 Plus inverters). The integrated system monitoring enables the inverter to be integrated into a network by means of WLAN.

Additional inverter in the system
converts the direct current into alternating current. However, it cannot charge a battery, and is not available in backup power mode.

Battery
is coupled to the inverter on the direct current side, and stores electrical energy.

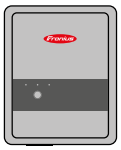

Fronius Ohmpilot
for using excess energy to heat water.

Primary meter
Records the system's load curve and provides measurement data for energy profiling in Fronius Solar.web. The primary meter also controls the dynamic feed-in control.

Secondary meter
Records the load curve of individual loads (e.g. washing machine, lamps, TV, heat pump, etc.) in the consumption branch and provides measurement data for energy profiling in Fronius Solar.web.

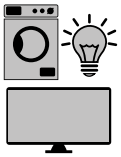

Loads in the PV system
are the loads connected in the system.

Additional loads and producers in the system
are connected to the system by means of a Smart Meter.

PV Point
is a non-uninterruptible single-phase backup power circuit which supplies electrical devices with up to 3 kW if sufficient power is available from the PV modules or the battery.

Full Backup
the inverter is prepared for backup power mode. The backup power mode must be implemented in the switch cabinet by the electrician performing the installation. The PV system operates in a stand-alone manner in backup power mode.

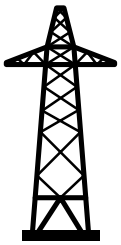

Grid
supplies the loads in the system if insufficient power is being generated by the PV modules or supplied by the battery.

Operating mode – Inverter with battery

In order to be able to obtain the highest rate of self-consumption with your PV system, a battery can be used to store excess energy. The battery is coupled to the inverter on the direct current side. Multiple current conversion is therefore not required, and the efficiency is increased.

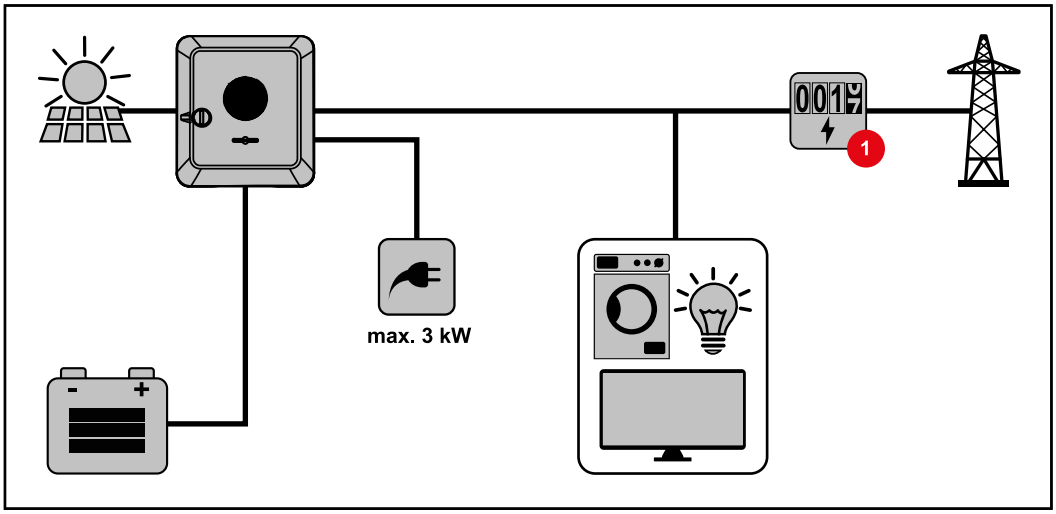

Operating mode – Inverter with battery and several Smart Meters

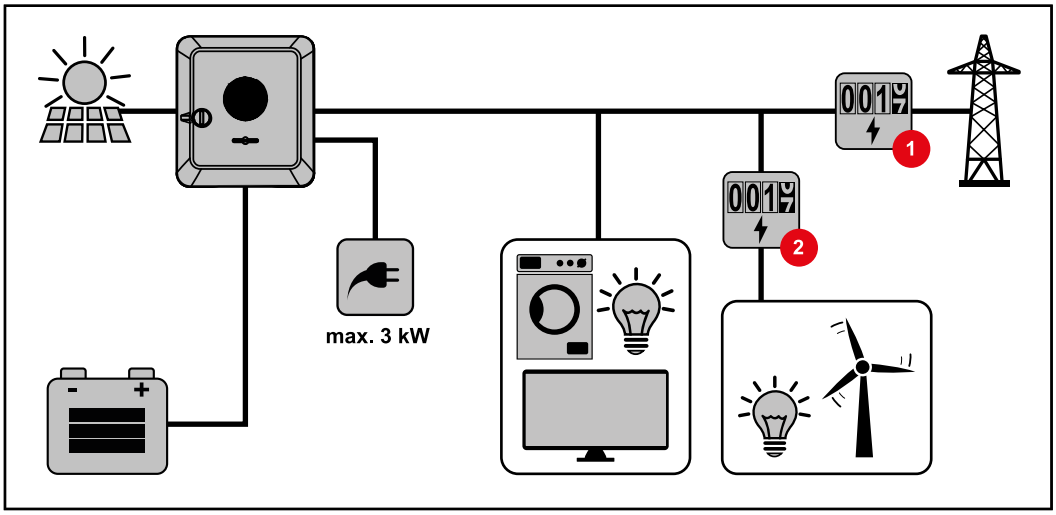

Operating mode - inverter with battery, AC-coupled to another inverter

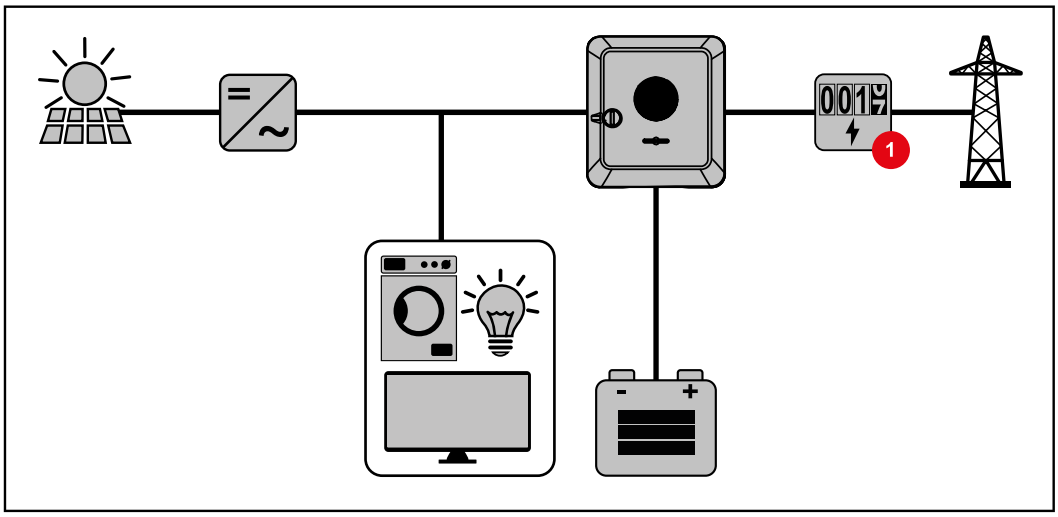

Operating mode – Inverter with battery and backup power function

IMPORTANT!
In backup power mode, an increased nominal frequency is used in order to prevent undesired parallel operation with other power generators.

In the fully equipped hybrid PV system, the inverter can:
- Supply loads in the house
- Store excess energy in the battery and/or feed it into the grid
- Supply connected loads in the event of a power failure

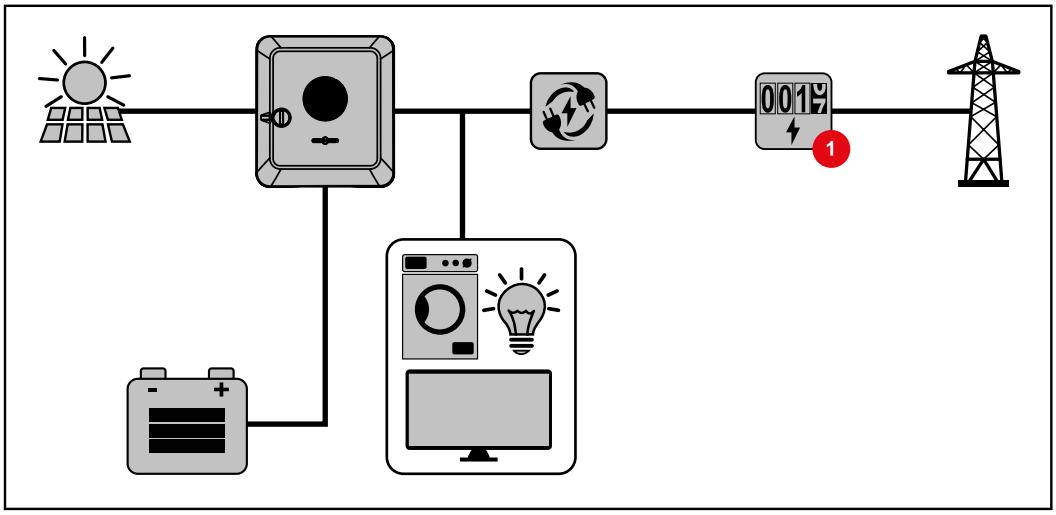

Operating mode – Inverter with battery and Ohmpilot

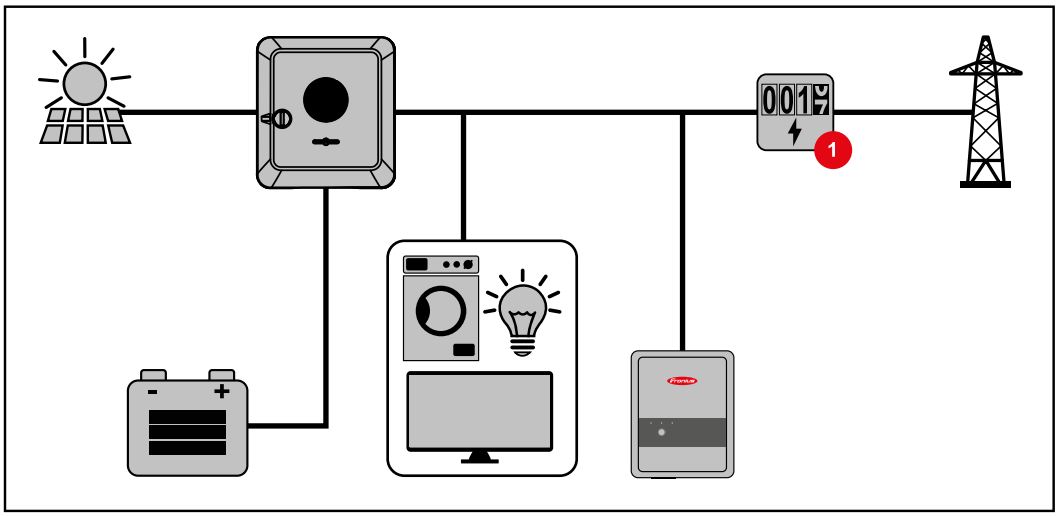

Operating mode – Inverter with battery, Ohmpilot and backup power function

IMPORTANT!
In the fully equipped hybrid PV system with a Fronius Ohmpilot, the Ohmpilot cannot be operated in the event of a power failure for regulatory reasons. It is therefore sensible to install the Ohmpilot outside of the backup power branch.

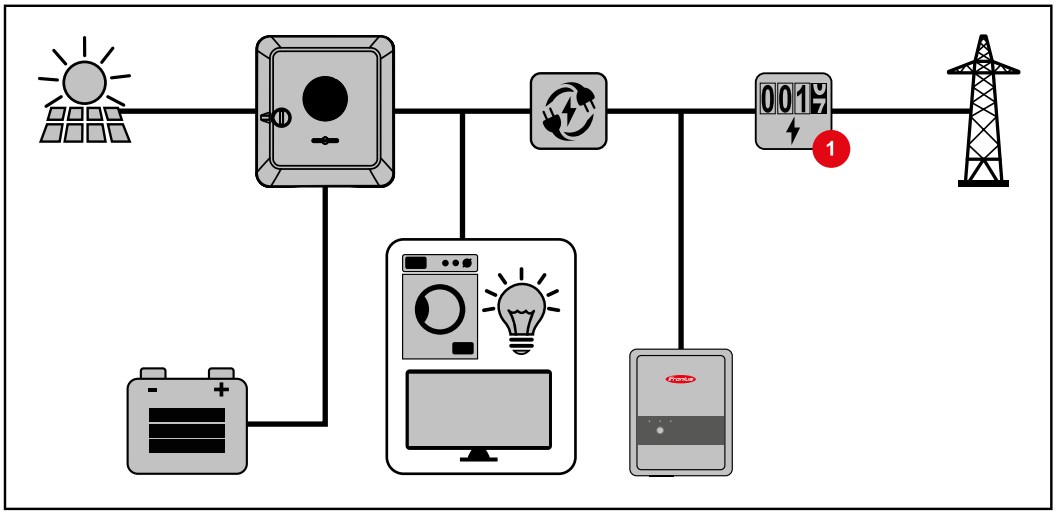

Operating mode – Inverter with battery and additional inverter

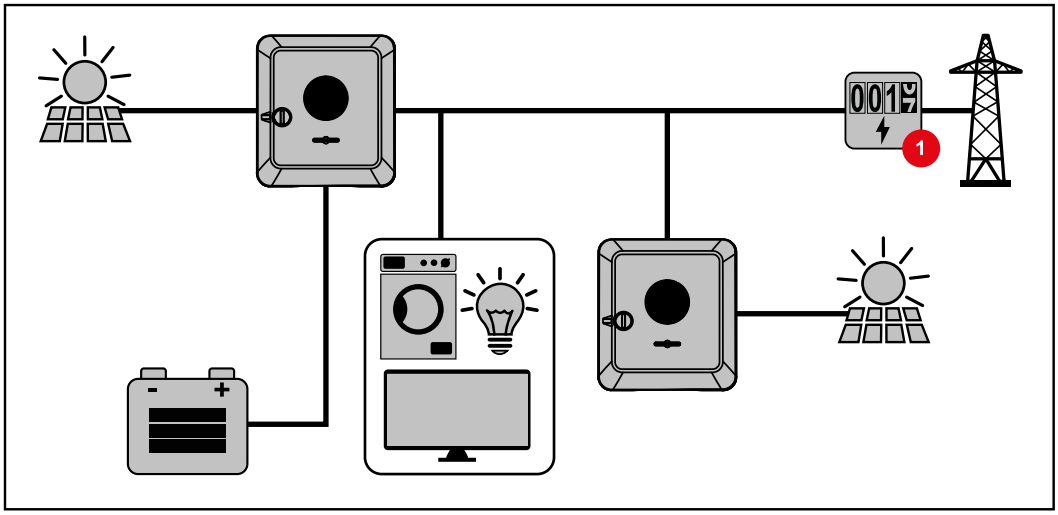

Operating mode – Inverter with battery, further inverter and backup power function

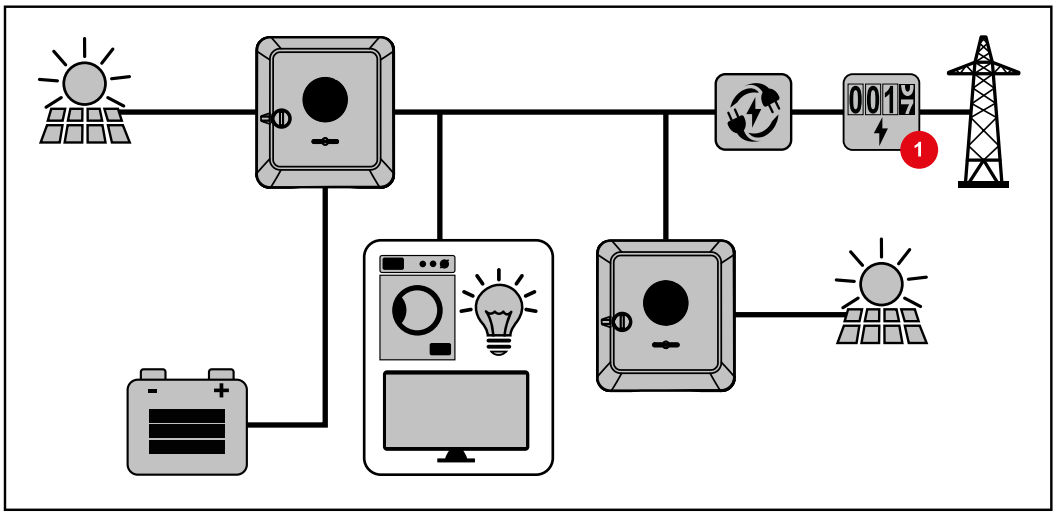

Energy flow direction of the inverter

In the case of hybrid inverters, there are four different energy flow directions:

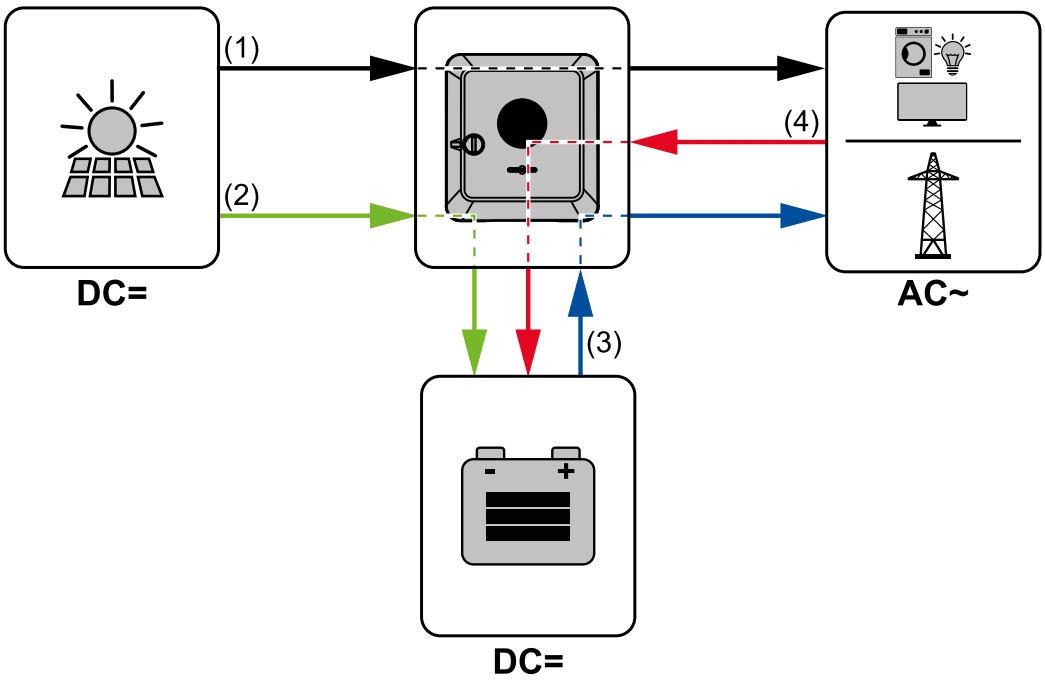

(1) Solar module – inverter – load/grid
(2) Solar module – inverter – battery*
(3) Battery – inverter – load/grid*
(4) Grid – inverter – battery*

* depending on the settings and local standards and regulations.

Operating states (only for systems with a battery)

Battery systems distinguish different operating states. In this case, the relevant current operating state is displayed on the website of the inverter or in Solar.web.

Operating state	Description
Normal operation	Energy is stored or drawn, as required.
Min. state of charge (SOC) achieved	Battery has reached the minimum SOC set or specified by the manufacturer. The battery cannot be discharged any further.
Energy saving mode (standby)	The system has been put into energy saving mode. Energy saving mode is automatically ended as soon as sufficient excess energy is available again.
Start	The storage system starts from energy saving mode (standby).
Forced re-charging	The inverter re-charges the battery, in order to maintain the set minimum SOC (state of charge) or the SOC specified by the manufacturer (protection against deep discharge).
Deactivated	The battery is not active. It has either been deactivated/switched off, or an error means that no communication with the battery is possible.

Energy saving mode

General

Energy saving mode (standby mode) is used to reduce the self-consumption of the system. Both the inverter and the battery automatically switch into energy saving mode under certain conditions.

The inverter switches into energy saving mode if the battery is flat and no PV power is available. Only the inverter's communication with the Fronius Smart Meter and Fronius Solar.web is maintained.

Switch-off conditions

If all the switch-off conditions are met, the battery switches into energy saving mode within ten minutes. This time delay ensures that the inverter can at least be restarted.

⩽ min. SoC	The battery state of charge is less than or equal to the input minimum state of charge.
< 50 W	The power from the solar modules is less than 50 W.
< 100 W	The current charging or discharging power of the battery is less than 100 W.
< 50 W	Less than 50 W is available for charging the battery. The power of feeding into the public grid is at least 50 W less than the power currently required in the home network.

The inverter automatically switches into energy saving mode, following the battery.

Switch-on conditions

If one of the following conditions is met for at least 30 seconds, energy saving mode is ended:

- Energy saving mode is no longer permissible owing to a changed setting on the website of the inverter.
- More than 50 W is available for charging the battery. The power of feeding into the public grid is at least 50 W greater than the power currently required in the home network.
- If dynamic power reduction of 0 is set, or if the system is operating in backup power mode, the power of feeding into the public grid is always less than the required power in the home network.
  There is a separate condition for this case (dynamic power reduction < 300 W or active backup power mode): If the PV power is above a specified threshold (50 W), the energy saving mode is ended.
- Battery charging from the public grid is requested via the website.
- The battery is being recharged in order to restore the minimum state of charge or perform calibration.

Special case

If the inverter does not operate for 12 minutes (e.g. fault), or there is an interruption in the electrical connection between the inverter and the battery and there is no backup power mode, the battery switches to energy-saving mode in any case. This reduces self discharge of the battery.

Indication of energy saving mode

During energy saving mode:

- Operating LED for the inverter lights up orange (see **Button functions and LED status indicator** on page **87**).
- The website of the inverter can be reached.
- All the available data is saved and transmitted to Solar.web.
- The real-time data can be seen on Solar.web.

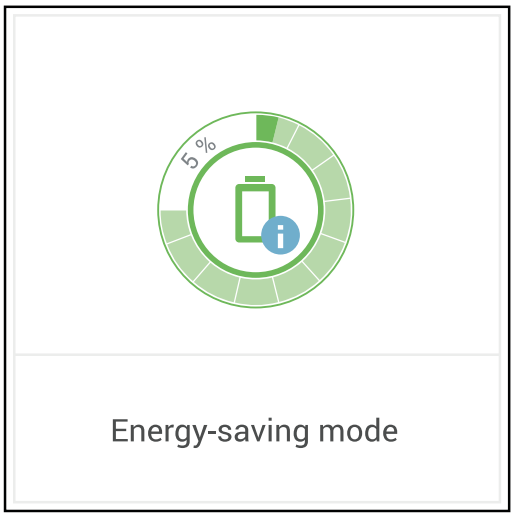

Energy saving mode is shown on the website of the inverter and in Solar.web by an "i" beside the battery symbol in the system overview.

Suitable battery

BYD Battery-Box Premium

Fronius explicitly points out that the third-party batteries are not Fronius products. Fronius is not the manufacturer, distributor or retailer of these batteries. Fronius accepts no liability and offers no service or guarantees for these batteries.

Obsolete firmware/software states may lead to incompatibilities between the inverter and the battery. In this case, the following steps are to be performed:
- Update battery software—see the battery documentation.
- Update inverter firmware - see **Update** on page **99**.

Before installation and commissioning, read this document and the Installation Instructions for the external battery.

All the documents relating to the inverter can be found at the following address:

https://www.fronius.com/en/solar-energy/installers-partners/service-support/tech-support

The documentation for the BYD Battery-Box Premium is enclosed with the third-party battery or can be obtained from the battery manufacturer and its service partners.

BYD Battery-Box Premium HVS / HVM	Symo GEN24 Plus
HVS 5.1	✓
HVS 7.7	✓
HVS 10.2	✓
HVS 12.8	✗
HVM 8.3	✗
HVM 11.0	✓
HVM 13.8	✓
HVM 16.6	✓
HVM 19.3	✓
HVM 22.1	✓

IMPORTANT! To ensure reliable operation with a BYD Battery-Box Premium, the following switch-on sequence for the system must always be observed.

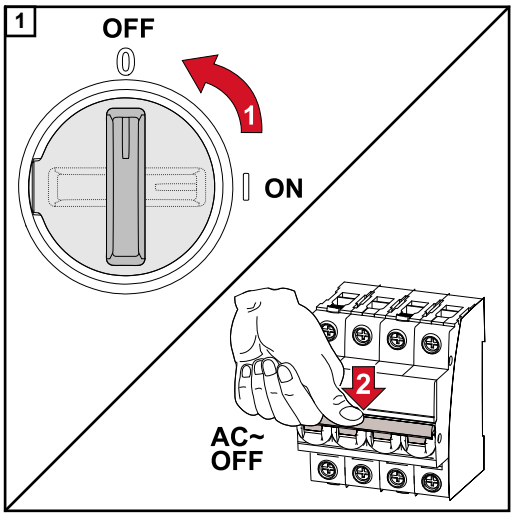

Set the DC disconnector to the "Off" switch position. Turn off the automatic circuit breaker.

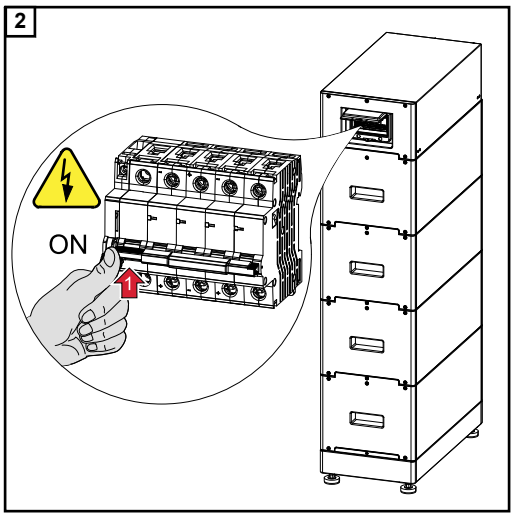

Switch on the battery.

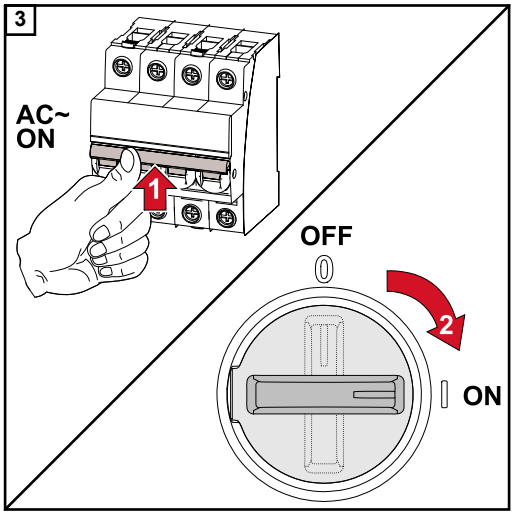

Switch on the automatic circuit breaker.
Set the DC disconnector to the "On" switch position.

Protection of people and equipment

Central grid and system protection

The inverter offers the option to use the integrated AC relays as coupling switches in conjunction with a central grid and system protection unit (in accordance with VDE-AR-N 4105:2018:11 §6.4.1). For this purpose, the central trigger device (switch) must be integrated into the WSD chain as described in the chapter "WSD (Wired Shut Down)".

WSD (wired shutdown)

The wired shutdown (WSD) interrupts the inverter's grid power feed if the trigger device (switch) has been activated.

If an inverter (slave) fails, it is bypassed and the other inverters continue operating. If a second inverter (slave) or the inverter (master) fails, the operation of the entire WSD chain is interrupted.

For installation, see **Installing the WSD (wired shutdown)** on page **85**.

RCMU

The inverter is equipped with a universal current-sensitive residual current monitoring unit (RCMU = Residual Current Monitoring Unit) in accordance with IEC 62109-2.
This device monitors residual currents from the PV module to the grid connection of the inverter and disconnects the inverter from the grid in the event of unauthorised residual current.

Control elements and connections

Connection area

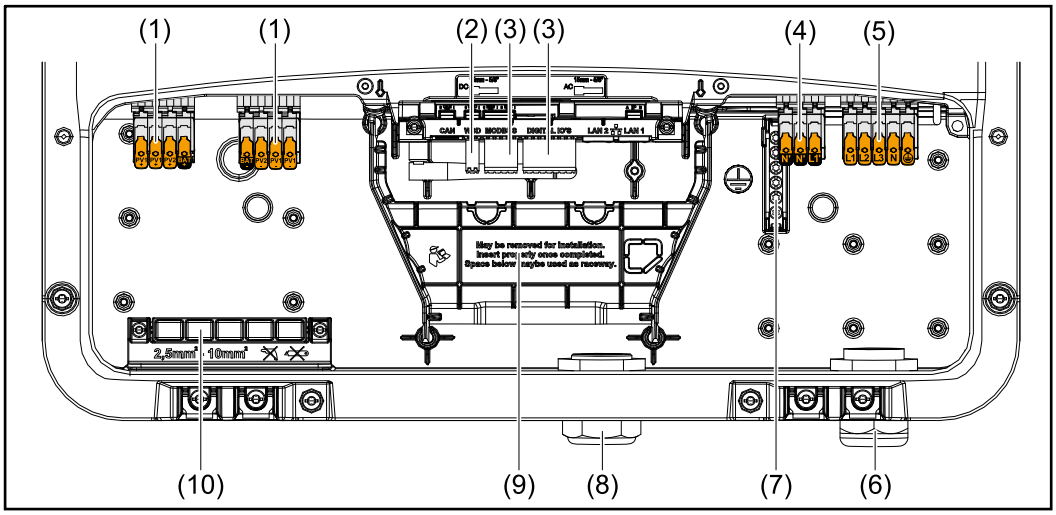

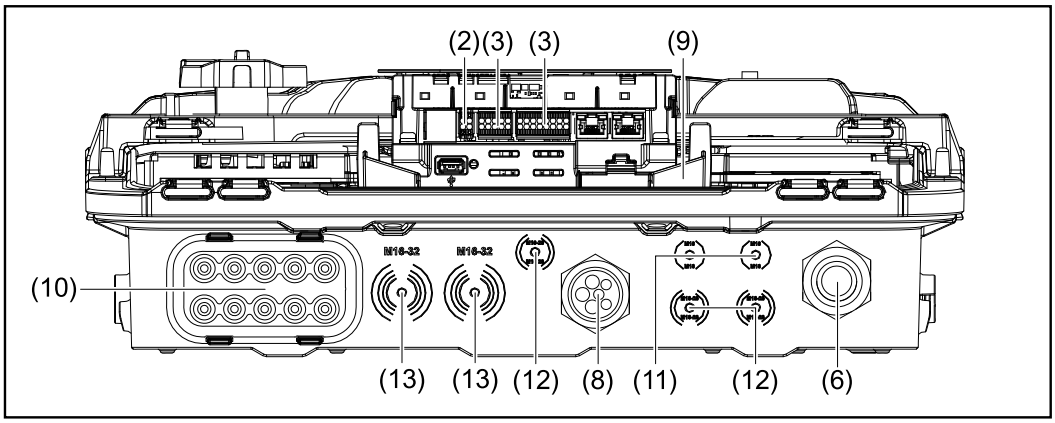

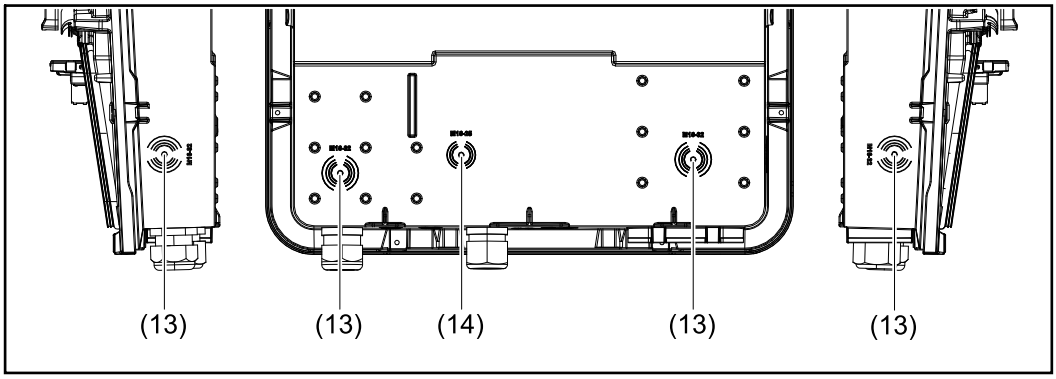

(1) 2 x 4-pin DC push-in terminal
(2) Push-in WSD (wired shutdown) terminal
(3) Push-in terminals in the data communication area (Modbus, digital inputs and outputs)
(4) 3-pin push-in terminal for PV point (OP)
(5) 5-pin AC push-in terminal
(6) Cable gland/strain-relief device AC
(7) 6-pin ground electrode terminal
(8) Cable gland/strain-relief device in the data communication area

(9) Connection area divider
(10) 10 x DC cable glands
(11) Optional cable gland (M16)
(12) Optional cable gland (M16 - M20)
(13) Optional cable gland (M16 - M32)
(14) Optional cable gland (M16 - M25)

Connection area divider

The connection area divider separates the high-voltage conductors (DC and AC) from the signal lines. To make it easier to reach the connection area, the divider can be removed for the connection work, and must be re-inserted.

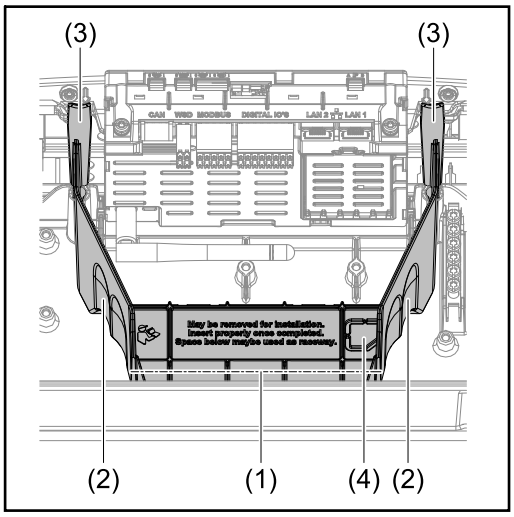

(1) Integrated cable duct
(2) Recesses for removing the connection area divider
(3) Snap tabs for locking/unlocking
(4) Defined breaking point for the Datcom connection

The integrated cable duct (1) allows for the lines to be laid from one area of the inverter to the other. As a result, multiple inverters can be easily installed next to each other.

Ground electrode terminal

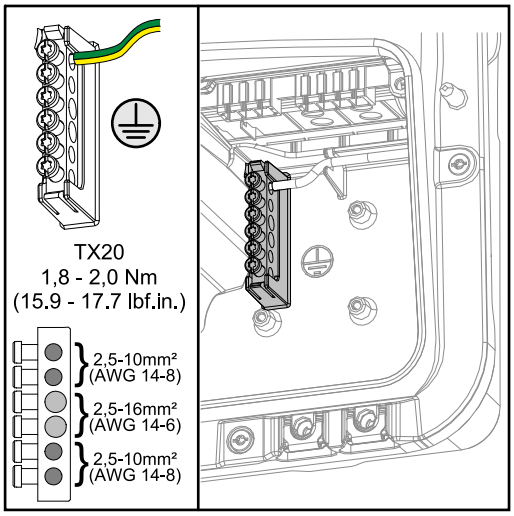

The ground electrode terminal ⏚ Allows additional components to be earthed, such as:

- AC cable
- Module mounting system
- Ground rod

DC disconnector

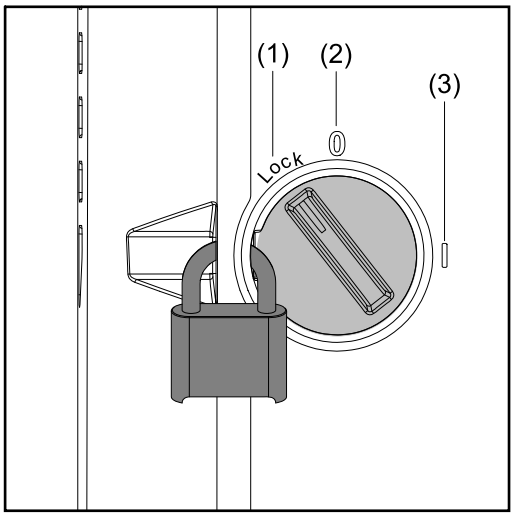

The DC disconnector has three switch settings:

(1) Locked/off (turned to the left)
(2) Off
(3) On

IMPORTANT!
In switch settings (1) and (3), a conventional padlock can be used to secure the inverter against being switched on/off.

- The national guidelines must be complied with in this respect.

Data communication area

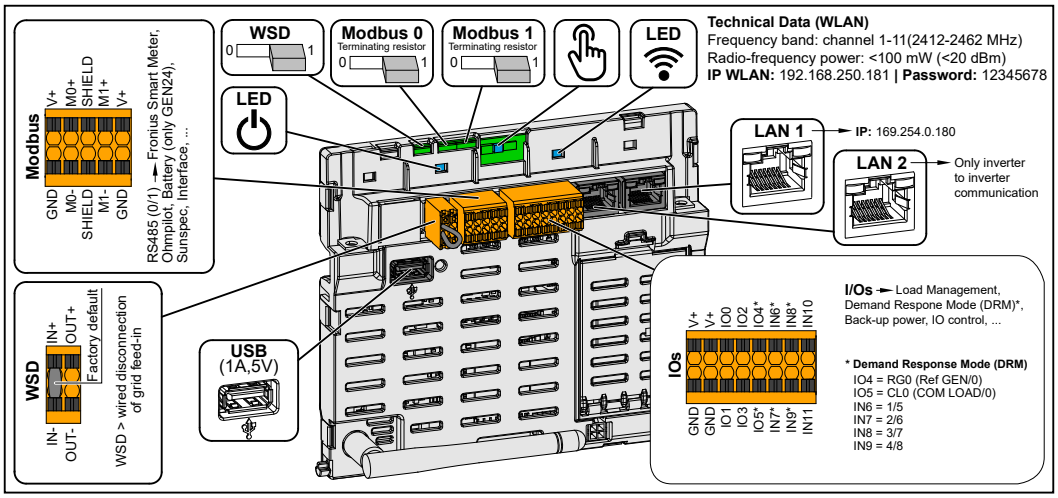

Modbus terminal	Push-in terminal for the installation of Modbus 0, Modbus 1, 12 V and GND (ground). The data connection to the connected components is established via the Modbus terminal. **The inputs M0 and M1 can be selected for this purpose.** Max. 4 Modbus participants per input, see chapter **Modbus participants** on page **80**.
WSD (wired shutdown) switch	Defines the inverter as a WSD master or WSD slave. **Position 1:** WSD master **Position 0:** WSD slave

Modbus 0 (MB0) switch	Switches the terminating resistor for Modbus 0 (MB0) on/off. **Position 1:** Terminating resistor on (factory setting) **Position 0:** Terminating resistor off
Modbus 1 (MB1) switch	Switches the terminating resistor for Modbus 1 (MB1) on/off. **Position 1:** Terminating resistor on (factory setting) **Position 0:** Terminating resistor off
Optical sensor	To operate the inverter. See chapter **Button functions and LED status indicator** on page **87**.
Communication LED	Indicates the inverter connection status.
Operating status LED	Indicates the inverter operating status.
LAN 1	Ethernet connection for data communication (e.g. WLAN router, home network or for commissioning with a laptop see chapter **Installation using the web browser** on page **89**).
LAN 2	Ethernet connection only for data communication from inverter to inverter.
WSD terminal	Push-in terminal for the WSD installation. See chapter **WSD (wired shutdown)**" on page **26**.
USB	Power supply max. 1 A at 5 V. Software updates and data recording via USB is not possible.
IOs terminal	Push-in terminal for digital inputs/ outputs. See chapter **Permitted cables for the data communication area** on page **55**. The designations (RG0, CL0, 1/5, 2/6, 3/7, 4/8) on the terminal refer to the Demand Response Mode function, see chapter **Functions andI/Os** on page **94**.

Internal schematic connection diagram of the IOs

On the V+/GND pin, it is possible to feed in a voltage of around 12.5 - 24 V (+ max. 20%) with an external power supply. The outputs IO 0 - 5 can then be operated with the external voltage. A maximum of 1 A can be drawn per output, with a maximum of 3 A allowed in total. The fuse protection must be located externally.

⚠ CAUTION!

Risk of polarity reversal at the terminals due to improper connection of external power supplies.
This may result in severe damage to the inverter.

- ▶ Check the polarity of the external power supply with a suitable measuring device before connecting it.
- ▶ Connect the cables to the V+/GND outputs with the correct polarity.

IMPORTANT!
If the total output (6 W) is exceeded, the inverter switches off the entire external power supply.

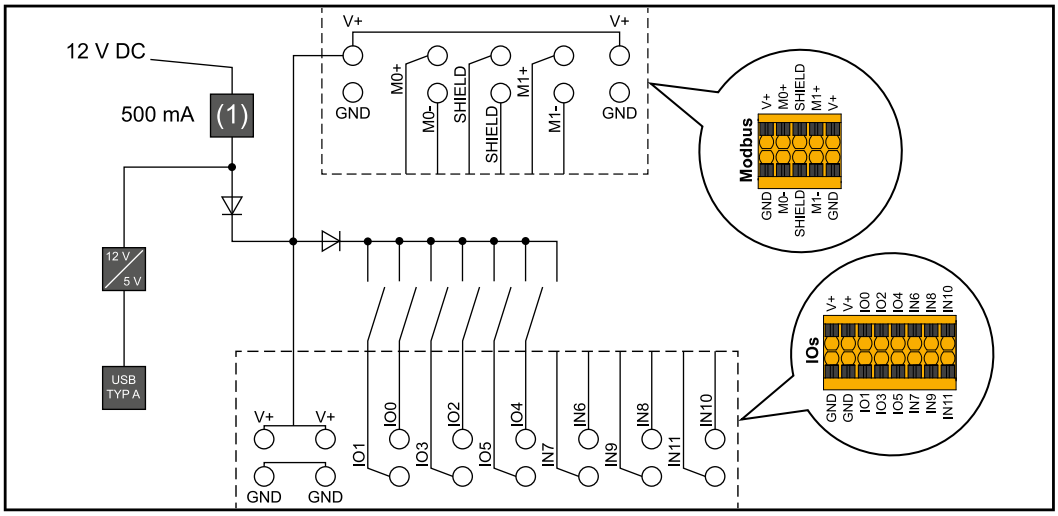

(1) Power limitation

Backup power variant - PV Point (OP)

General

PV Point (OP)

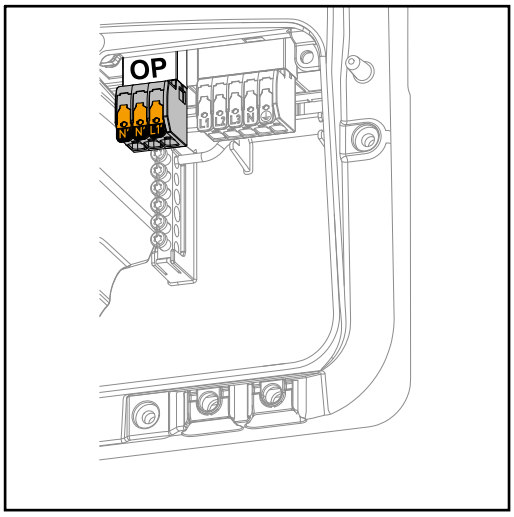

With the PV Point, in the event of a failure of the public grid, single-phase electrical devices can be connected to the Opportunity Power (OP) terminal and supplied with a maximum power of 3 kW, if enough power is available from the solar modules or an optional battery. In grid-connected operation, the OP terminal is not supplied with voltage, therefore the connected loads will not be supplied with power in this operating mode.

IMPORTANT!
A relay-based network switching setup is not possible.

Explanation - PV Point (OP)

The inverter can provide 120 to 240 V at the PV Point. A corresponding configuration must be set up during commissioning.

At 120 to 240 V output voltage, a maximum of 13 A AC continuous current is available.

For example:
120 V = max. 1.5 kW
230 V = max. 3 kW

In backup power mode, some electrical appliances cannot function properly as starting currents are too high (for example, fridges and freezers). It is recommended to switch off non-essential loads during backup power mode. Overload capacity of 35% is possible for a duration of 5 seconds, depending on the capacity of the solar modules and/or the battery at that moment in time.

There is a brief interruption when switching from grid-connected mode to backup power mode. For this reason, the backup power function cannot be used as an uninterruptible power supply, for example for computers.

If no energy from the battery or the solar modules is available in backup power mode, backup power mode ends automatically. If sufficient energy becomes available from the solar modules once again, backup power mode starts again automatically.

In the event of excessive consumption, backup power mode is stopped and the "backup power overload" status code is displayed on the inverter's LED status indicator. The maximum power in backup power mode according to the technical data must be observed.

Backup power variant - Full Backup

General

Prerequisites for backup power mode

In order to use the inverter's backup power function, the following prerequisites must be fulfilled:
- The inverter must be from the Fronius GEN24 Plus device series.
- A battery suitable for backup power use must be installed and configured.
- Correct cabling of the backup power system in the electrical installation or usage of a switch box from Enwitec (see chapter **Components for automatic Full Backup backup power changeover** on page **134** or **Circuit diagrams** on page **141**).
- Mount and configure the Fronius Smart Meter at the feed-in point.
- Attach a **warning notice for the backup power supply** (https://www.fronius.com/en/search-page, item number: 42,0409,0275) on the electrical distributor.
- Apply the necessary settings in the "Devices and system components" → "Functions and pins" → "Backup power" menu area and activate backup power.
- Follow the **backup power checklist** (https://www.fronius.com/en/search-page, item number: 42,0426,0365) step by step and confirm.

Transitioning from feeding energy into the grid to backup power mode

1. The public grid is monitored by the inverter's internal grid and system protection unit and by the Fronius Smart Meter connected to it.
2. **The public grid fails or specific grid parameters are dropped below or exceeded.**
3. The inverter carries out the measures necessary according to the country standard and then switches off.
4. The inverter starts backup power mode after a checking period.
5. All loads in the household that are in the backup power circuit are supplied by the battery and the PV modules. The remaining loads are not supplied with power and are safely isolated.

Transitioning from backup power mode to feeding energy into the grid

1. The inverter is operating in backup power mode.
2. **The public grid is functioning correctly again.**
3. The Fronius Smart Meter monitors the grid parameters on the public grid and passes this information to the inverter.
4. The stability of the returned public grid is determined by checking the measured values of the Fronius Smart Meter.
5. The inverter ends backup power mode.
6. All circuits are reconnected to the public grid and are supplied by the grid.
7. The inverter can start feeding energy into the grid again after performing the grid checks required by the relevant standard.

Backup power and energy saving mode

Under the following conditions, the battery and the inverter are switched to energy saving mode after a waiting time of 8 - 12 minutes and backup power mode is ended:
- The battery is discharged to the minimum state of charge and no energy is coming from the PV modules.
- The inverter is set to energy saving mode (standby mode).

If the battery and inverter are in energy saving mode, the system is reactivated by the following:
- Enough energy is available from the solar modules.
- The public grid is functioning again.
- The battery is switched off and on.

Cabling variants including emergency power circuits and 3-pin separation e.g. Austria or Australia

Functions

- Measuring and transferring the required parameters for energy management and Solar.web by the Fronius Smart Meter.
- Disconnecting from the public grid to enable operation in backup power mode if the grid parameters are outside the country-specific standards.
- Reconnecting to the public grid when the grid parameters are within the limits specified by the country-specific standards.
- Option of having a separate backup power circuit or several backup power circuits that are supplied even during failure of the public grid. The total load of the backup power circuits must not exceed the nominal output of the inverter. Furthermore, the performance of the connected battery must also be considered.

Transitioning from feeding energy into the grid to backup power mode

1. The public grid is monitored by the inverter's internal grid and system protection unit and by the Fronius Smart Meter connected to it.
2. **Failure of the public grid**.
3. The inverter carries out the necessary measures according to the country standard and then switches off.
   Contactors K1 and K2 drop out. This disconnects the backup power circuits and the inverter from the rest of the home network and from the public grid, as the main contacts of the contactors K1 and K2 3-pin open. The inverter activates relay K3, which interrupts the supply to contactors K1 and K2. This prevents unintentional activation of contactors K1 and K2 and thus a grid connection when voltage is restored in the grid. The NC auxiliary contacts of contactors K1 and K2 send feedback to the inverter that the contactors are open (a condition for starting backup power mode).
4. The NO contact of relay K3 gives additional feedback to the inverter on whether the locking was successfully performed by relay K3.
5. The inverter decides based on the contactors' feedback as well as the measurements on the inverter terminals and the Smart Meter that backup power mode can be started.
6. After all the required activation tests have been carried out, the inverter starts backup power mode.
7. All loads in the backup power circuits are supplied with power. The remaining loads are not supplied with power and are safely isolated.

Transitioning from backup power mode to feeding energy into the grid

1. The inverter is operating in backup power mode. The contactors K1 and K2 to the public grid are open.
2. **Public grid available again.**
3. The Fronius Smart Meter monitors the grid parameters on the public grid and passes this information to the inverter.
4. The stability of the returned public grid is determined by checking the measured values of the Fronius Smart Meter.
5. The inverter ends backup power mode and disconnects the outputs.
6. The inverter deactivates K3. The contactors K1 and K2 are reactivated.
7. All circuits are reconnected to the public grid and are supplied by the grid. The inverter does not feed anything into the grid at this time.
8. The inverter can start feeding energy into the grid again after performing the grid checks required by the relevant standard.

All-pin separation cabling variant, e.g. Germany, France

Functions

- Measuring and transferring the required parameters for energy management and Solar.web by the Fronius Smart Meter.
- Disconnecting from the public grid to enable operation in backup power mode if the grid parameters are outside the country-specific standards.
- Reconnecting to the public grid when the grid parameters are within the limits specified by the country-specific standards.
- Establishing a proper ground connection for backup power mode to ensure the protection devices function correctly.
- Option of having a separate backup power circuit or several backup power circuits that are supplied even during failure of the public grid. The total load of the backup power circuits must not exceed the nominal output of the inverter. Furthermore, the performance of the connected battery must also be considered.

Transitioning from feeding energy into the grid to backup power mode

1. The public grid is monitored by the inverter's internal grid and system protection unit and by the Fronius Smart Meter connected to it.
2. **Failure of the public grid**.
3. The inverter carries out the necessary measures according to the country standard and then switches off.
   Contactors K1, K2, K4 and K5 drop out. This disconnects the backup power circuits and the inverter from the rest of the home network and from the public grid, as the main contacts of the contactors K1 and K2 open at all pins. The NC auxiliary contacts of contactors K1 and K2 send feedback to the inverter that the contactors are open (a condition for starting backup power mode).
4. The NC main contacts of contactors K4 and K5 are closed, establishing a connection between the neutral conductor and the ground conductor. The two other NC main contacts of contactors K4 and K5 give feedback to the inverter that the ground connection has been established correctly (a condition for starting backup power mode).
5. The inverter activates relay K3, which interrupts the supply to contactors K1, K2, K4 and K5. This prevents unintentional activation of contactors K1, K2, K4 and K5 and thus a grid connection when voltage is restored in the grid.
6. The NO contact of relay K3 gives additional feedback to the inverter on whether the locking was successfully performed by relay K3.
7. The inverter decides based on the contactor's feedback as well as the measurements on the inverter terminals and the Smart Meter that the emergency power mode can be activated.
8. After all the required activation tests have been carried out, the inverter starts backup power mode.
9. All loads in the backup power circuits are supplied with power. The remaining loads are not supplied with power and are safely isolated.

Transitioning from backup power mode to feeding energy into the grid

1. The inverter is operating in backup power mode. The contactors K1 and K2 to the public grid are open.
2. **Public grid available again.**
3. The Fronius Smart Meter monitors the grid parameters on the public grid and passes this information to the inverter.
4. The stability of the returned public grid is determined by checking the measured values of the Fronius Smart Meter.
5. The inverter ends backup power mode and disconnects the outputs.
6. The inverter deactivates K3. Power is restored to contactors K1, K2, K4 and K5.
7. All circuits are reconnected to the public grid and are supplied by the grid. The inverter does not feed anything into the grid at this time.
8. The inverter can start feeding energy into the grid again after performing the grid checks required by the relevant standard.

All-pin split separation cabling variant (Italy)

Functions

- Measuring and transferring the required parameters for energy management and Solar.web by the Fronius Smart Meter.
- Monitoring of the voltage and frequency grid parameters by the inverter.
- Disconnecting from the public grid to enable operation in backup power mode if the grid parameters are outside the country-specific standards.
- Reconnecting to the public grid when the grid parameters are within the limits specified by the country-specific standards.
- Establishing a correct ground connection for backup power mode.
- Option of having a separate backup power circuit or several backup power circuits that are supplied even during failure of the public grid. The total load of the backup power circuits must not exceed the nominal output of the inverter. Furthermore, the performance of the connected battery must also be considered.

Transitioning from feeding energy into the grid to backup power mode

1. The public grid is monitored by the inverter's internal grid and system protection unit and by an external grid and system protection unit.
2. **Failure of the public grid**
3. The inverter carries out the measures necessary according to the country standard and then switches off.
4. The external grid and system protection unit opens contactors K1 and K2 for grid monitoring. This disconnects the backup power circuits and the inverter from the rest of the home network and from the public grid, as the main contacts of the contactors K1 and K2 open at all pins. To ensure that the public grid has definitely been disconnected, the NC auxiliary contacts of contactor K1 give feedback to the external grid and system protection unit.
5. The NC main contact of contactors K4 and K5 is closed, establishing a connection between the neutral conductor and the ground conductor. The two other NC main contacts of contactors K4 and K5 give feedback to the inverter that the ground connection has been established correctly.
6. The inverter activates relay K3, which activates the remote input of the external grid and system protection unit via an NC contact. This prevents a connection to the public grid when voltage is restored in the grid.
7. The NO contact of relay K3 gives additional feedback to the inverter on whether the locking was successfully performed by relay K3.
8. The inverter decides based on the contactors' feedback as well as the measurement on the inverter terminals and the Smart Meter that backup power mode can be started.
9. The inverter starts backup power mode after a defined checking period.
10. All loads in the backup power circuits are supplied with power. The remaining loads are not supplied with power and are safely isolated.

Transitioning from backup power mode to feeding energy into the grid

1. The inverter is operating in backup power mode. The contactors K1 and K2 to the public grid are open.
2. **Public grid available again.**
3. The Fronius Smart Meter monitors the grid parameters on the public grid and passes this information to the inverter.
4. The stability of the returned public grid is determined by checking the measured values of the Fronius Smart Meter.
5. On the basis of adjustments that have been carried out, the inverter ends backup power mode and disconnects the outputs.
6. The inverter deactivates K3. Power is restored to contactors K1, K2, K4 and K5.
7. All circuits are reconnected to the public grid and are supplied by the grid. The inverter does not feed anything into the grid at this time.
8. The inverter can start feeding energy into the grid again after performing the grid checks required by the relevant standard.

Installation

General

Quick-lock system

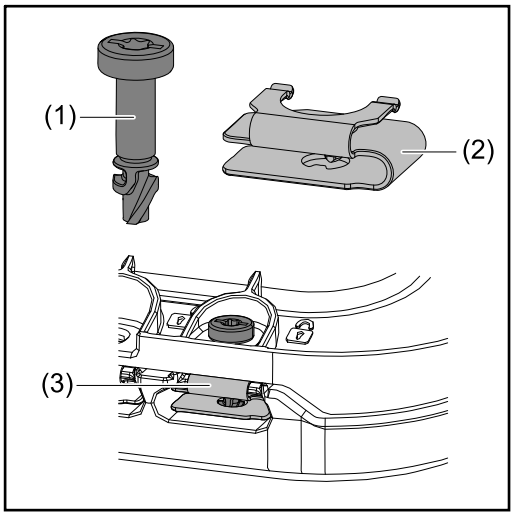

A quick-lock system (3) is used to mount the connection area cover and front cover. The system is opened and closed with a half-rotation (180°) of the captive screw (1) into the quick-lock spring (2).

The system is independent of torque.

NOTE!

Danger when using a drill driver.
This may result in the destruction of the quick-lock system due to overtorque.

- ▶ Use a screwdriver (TX20).
- ▶ Do not turn the screws more than 180°.

Warning notices on the device

Technical data, warning notices and safety symbols are affixed to the inverter. These warning notices and safety symbols must not be removed or painted over. They warn against incorrect operation which can lead to serious injury and damage.

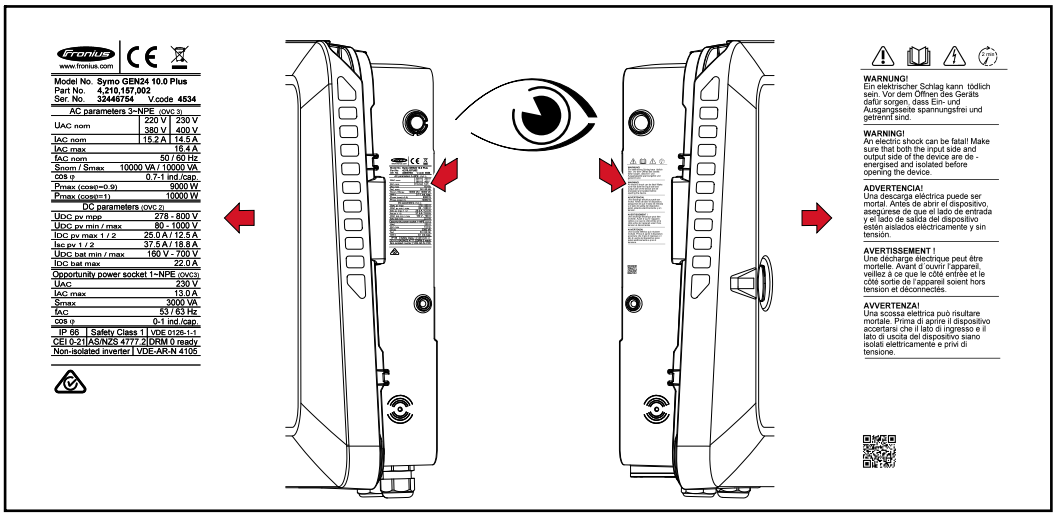

Symbols on the rating plate:

CE The devices comply with all the requisite and relevant standards and guidelines that form part of the relevant EU Directive, and are therefore permitted to display the CE mark.

To comply with European Directive 2012/19/EU on Waste Electrical and Electronic Equipment and its implementation as national law, electrical equipment that has reached the end of its life must be collected separately and returned to an approved recycling facility. Any device that you no longer require must be returned to your distributor or disposed of at an approved collection and recycling facility in your area. Ignoring this European Directive may have potentially adverse effects on the environment and your health!

RCM symbol – the product complies with Australian legislative requirements.

Safety symbols:

Risk of serious injury and property damage due to incorrect operation.

Do not use the functions described here until you have fully read and understood the following documents:

- These Operating Instructions.
- All Operating Instructions for the system components of the photovoltaic system, especially the safety rules.

Dangerous electrical voltage.

Allow the capacitors of the inverter to discharge (2 minutes).

Warning notice text:

WARNING!
An electric shock can be fatal. Before opening the device, it must be disconnected and de-energized at the input and output.

Installation location and position

Choosing the location of the inverter

Please note the following criteria when choosing a location for the inverter:

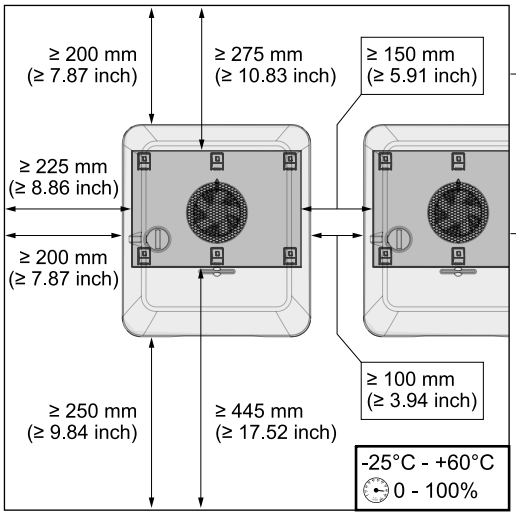

Only install on a solid, non-flammable surface.

Max. ambient temperatures:
-25 °C – +60 °C

Relative humidity:
0-100%

If the inverter is installed in a switch cabinet or similar enclosed space, ensure sufficient heat dissipation with forced-air ventilation.

For detailed information on the dimensions of the inverter, see chapter **Fronius Symo GEN24 6 - 10 kW** on page **155**.

When installing the inverter on the outer walls of cattle sheds, it is important to keep a minimum clearance of 2 m between all sides of the inverter and air vents and building openings.

The following surfaces are permissible for installation:
- Walls (corrugated metal walls [mounting rails], brick walls, concrete walls, or other non-flammable surfaces sufficiently capable of bearing loads)
- Poles (installed using mounting rails, behind the solar modules directly on the PV mounting system)
- Flat roofs (if this is for a film roof, make sure that the films comply with the fire protection requirements and are not highly flammable. Ensure compliance with the national provisions.)
- Covered car park roofs (no overhead installation)

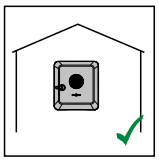

The inverter is suitable for indoor installation.

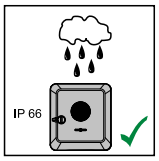

The inverter is suitable for outdoor installation.

Because of its IP 66 protection class, the inverter is resistant to water jets from any direction and can also be used in damp environments.

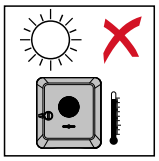

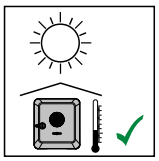

In order to minimise the heating up of the inverter, do not expose it to direct insolation. The inverter should be installed in a protected location, for example, near the solar modules or under an overhanging roof.

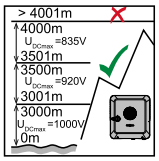

IMPORTANT!
The inverter must not be installed or used at altitudes above 4000 m.

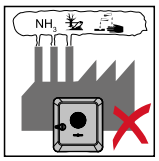

Do not install the inverter in:
- Areas where it may be exposed to ammonia, corrosive gases, acids or salts (e.g. fertiliser storage areas, vent openings for livestock stables, chemical plants, tanneries, etc.)

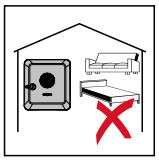

During certain operating phases the inverter may produce a slight noise. For this reason it should not be installed in an occupied living area.

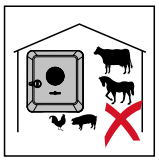

Do not install the inverter in:
- Areas where there is an increased risk of accidents from farm animals (horses, cattle, sheep, pigs, etc.)
- Stables or adjoining areas
- Storage areas for hay, straw, chaff, animal feed, fertilizers, etc.

The inverter is essentially designed to be dustproof (IP 66). In areas of high dust accumulation, dust deposits may collect on the cooling surfaces, and thus impair the thermal performance. Regular cleaning is required in this case, see chapter **Operation in dusty environments** on page **131**. We therefore recommend not installing the inverter in areas and environments with high dust accumulation.

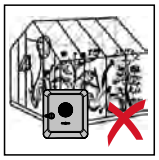

Do not install the inverter in:
- Greenhouses
- Storage or processing areas for fruit, vegetables or viticulture products
- Areas used in the preparation of grain, green fodder or animal feeds

Choosing the location of third-party batteries

IMPORTANT!
Refer to the manufacturer's documents for the suitable location for third-party batteries.

Explanation of symbols for the installation position

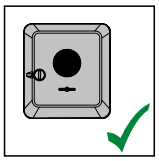

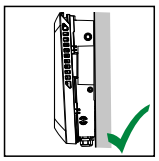

The inverter is suitable for vertical installation on a vertical wall or column.

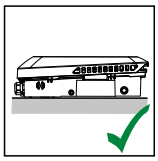

The inverter is suitable for a horizontal installation position.

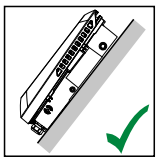

The inverter is suitable for installation on a sloping surface.

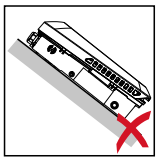

Do not install the inverter on a sloping surface with its connection sockets at the top.

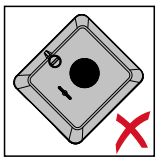

Do not install the inverter at an angle on a vertical wall or column.

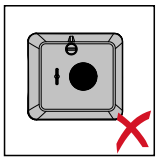

Do not install the inverter horizontally on a vertical wall or pillar.

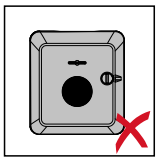

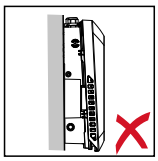

Do not install the inverter on a vertical wall or pillar with its connection sockets facing upwards.

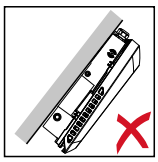

Do not install the inverter overhanging with the connection sockets at the top.

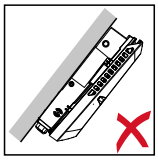

Do not install the inverter overhanging with the connection sockets at the bottom.

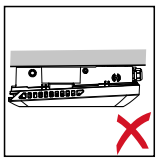

Do not install the inverter on the ceiling.

Install the mounting bracket and hang up the inverter

Selecting the fixing material

Use the corresponding fixing materials depending on the subsurface and observe the screw dimension recommendations for the mounting bracket.
The installer is responsible for selecting the right type of fixing.

Properties of the mounting bracket

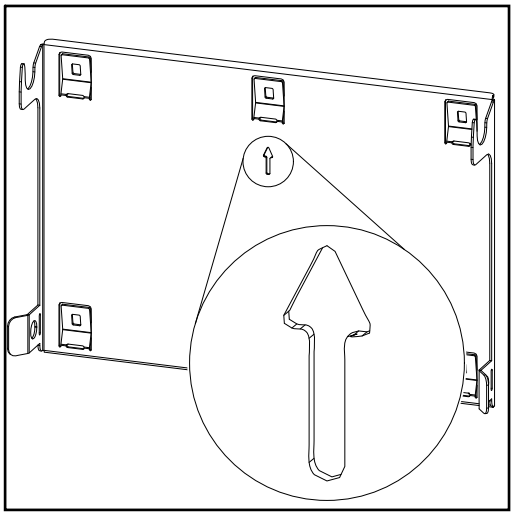

The separate mounting bracket (illustration) is also used as the gauge.

The pre-drilled holes on the mounting bracket are intended for screws with a thread diameter of 6 - 8 mm (0.24 - 0.32 inches).

Unevenness on the installation surface (for example, coarse-grained plaster) is largely counterbalanced by the mounting bracket.

Do not deform the mounting bracket

NOTE!

When fitting the mounting bracket to the wall or column, ensure that the mounting bracket does not become deformed.
A deformed mounting bracket may make it difficult to clip/swivel the inverter into position.

Fitting the mounting bracket to a wall

IMPORTANT!
When installing the mounting bracket, make sure that it is installed with the arrow pointing upwards.

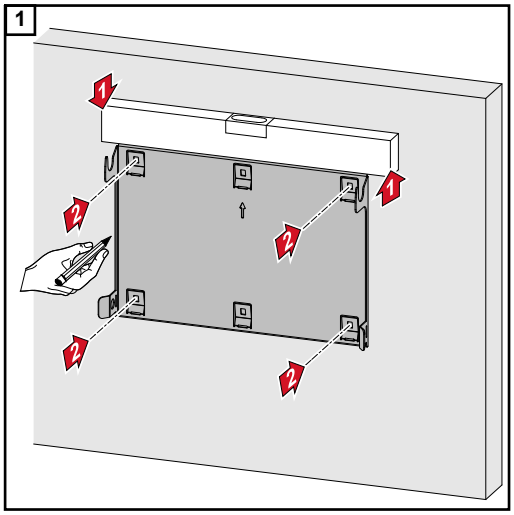

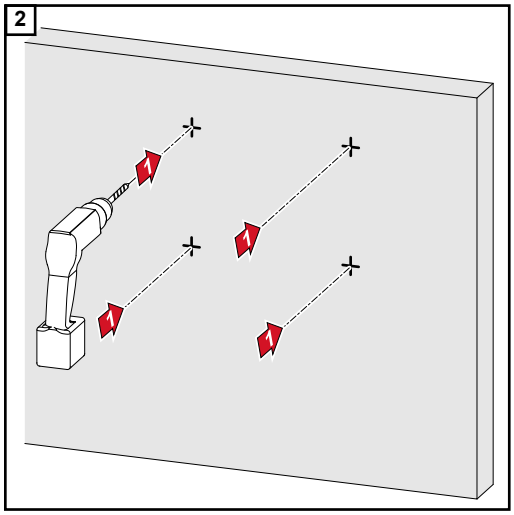

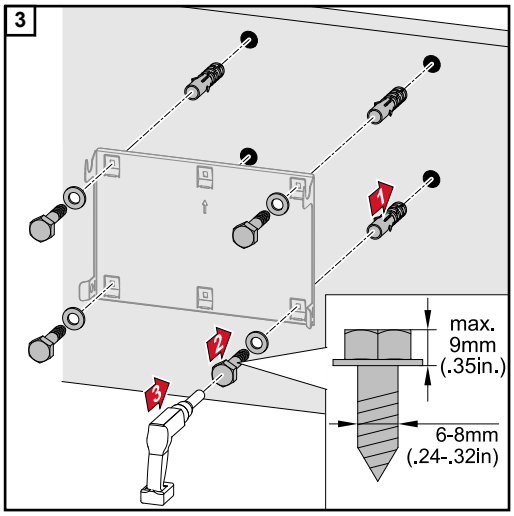

Installing the mounting bracket on a mast or beam

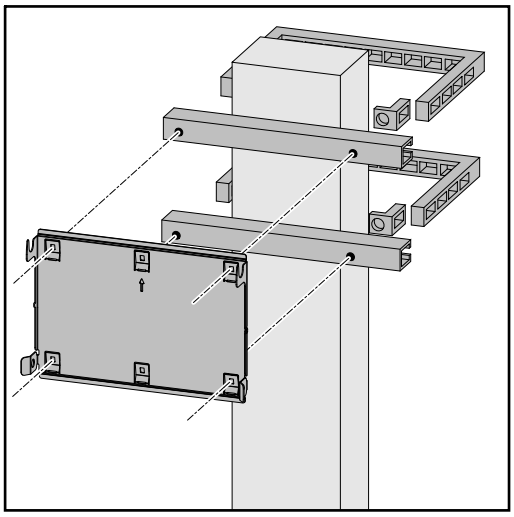

When installing the inverter on a mast or beam, Fronius recommends using the "Pole clamp" (order no. SZ 2584.000) mounting kit from Rittal GmbH.

The "Pole clamp" kit covers the following dimensions:

- Rectangular mast or beam with a side length of 50-150 mm (1.97-5.91 inches)
- Round mast or beam with a diameter of 40-190 mm (1.57-7.48 inches)

Attaching the mounting bracket to mounting rails

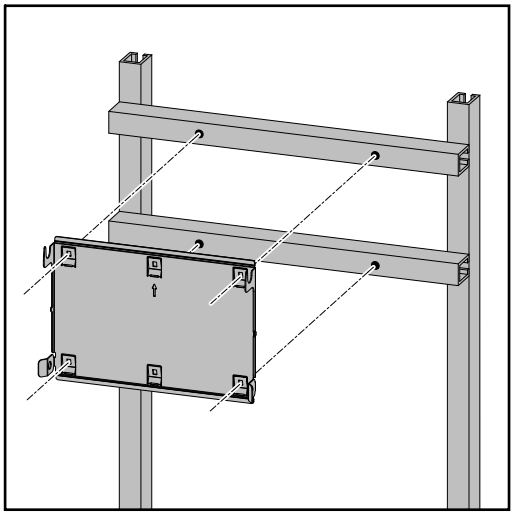

IMPORTANT!
The mounting bracket must be affixed at a minimum of four points.

Attaching the inverter to the mounting bracket

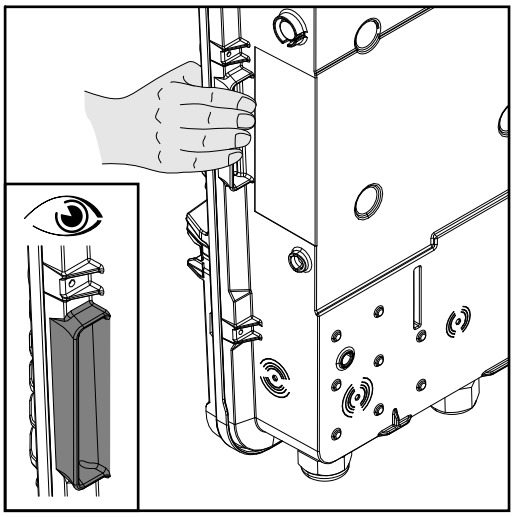

There are integrated grips on the side of the inverter which facilitate lifting/attaching.

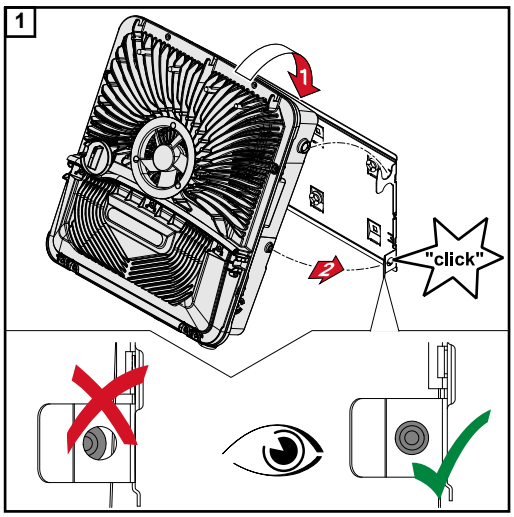

Clip the inverter into the mounting bracket from above. The connections must point downwards.

The lower area of the inverter is pushed into the snap-in tabs until the inverter audibly clicks into place on both sides.

Check that the inverter is correctly positioned on both sides.

Prerequisites for connecting the inverter

Permitted cables

Cables with the following design can be connected to the terminals of the inverter:

- Copper: round, solid

- Copper: round, fine-stranded, up to conductor class 4

Grid connections with push-in terminal **Select a sufficiently large cable cross section based on the actual device output.**				
Number of pins	**Solid**	**Multi-stranded**	**Fine-stranded**	**Fine-stranded with ferrules-with/without collar**
5	2.5–10 mm^2	2.5–10 mm^2	2.5–10 mm^2	2.5–6 mm^2

Grid connections backup power with push-in terminal **Select a sufficiently large cable cross section based on the actual device output.**				
Number of pins	**Solid**	**Multi-stranded**	**Fine-stranded**	**Fine-stranded with ferrules-with/without collar**
3	1.5–10 mm^2	1.5–10 mm^2	1.5–10 mm^2	1.5–6 mm^2

PV/BAT connections with push-in terminal **Select a sufficiently large cable cross section based on the actual device output.**				
Number of pins	**Solid**	**Multi-stranded**	**Fine-stranded**	**Fine-stranded with ferrules-with/without collar**
2 x 4	4–10 mm^2	4–10 mm^2	4–10 mm^2	4–6 mm^2

Ground electrode terminal **Select a sufficiently large cable cross section based on the actual device output.**				
Number of pins	**Solid**	**Multi-stranded**	**Fine-stranded**	**Fine-stranded with ferrules-with/without collar**
2	2.5–16 mm^2	2.5–16 mm^2	2.5–16 mm^2	2.5–16 mm^2
4	2.5–10 mm^2	2.5–10 mm^2	2.5–10 mm^2	2.5–10 mm^2

* According to product standard IEC 62109, the ground conductor must correspond to the phase cross-section for phase cross-sections ≤16 mm²; for phase cross-sections >16 mm², it must correspond to at least 16 mm².

Permitted cables for the data communication area

Cables with the following design can be connected to the terminals of the inverter:

- Copper: round, solid

- Copper: round, fine-stranded

IMPORTANT!
Connect the individual conductors to an appropriate ferrule if several individual conductors are connected to one input of the push-in terminals.

WSD connections with push-in terminal						
Distance max.	**Stripping length**	**Solid**	**Fine-stranded**	**Fine-stranded with ferrules with collar**	**Fine-stranded with ferrules without collar**	**Cable recommendation**
100 m 109 yd	10 mm 0.39 inch	0.14-1.5 mm^2 AWG 26-16	0.14-1.5 mm^2 AWG 26-16	0.14-1 mm^2 AWG 26-18	0.14-1.5 mm^2 AWG 26-16	min. CAT 5 UTP (unshielded twisted pair)

Modbus connections with push-in terminal						
Distance max.	**Stripping length**	**Solid**	**Fine-stranded**	**Fine-stranded with ferrules with collar**	**Fine-stranded with ferrules without collar**	**Cable recommendation**
300 m 328 yd	10 mm 0.39 inch	0.14-1.5 mm^2 AWG 26-16	0.14-1.5 mm^2 AWG 26-16	0.14-1 mm^2 AWG 26-18	0.14-1.5 mm^2 AWG 26-16	min. CAT 5 STP (shielded twisted pair)

IO connections with push-in terminal						
Distance max.	**Stripping length**	**Solid**	**Fine-stranded**	**Fine-stranded with ferrules with collar**	**Fine-stranded with ferrules without collar**	**Cable recommendation**
30 m 32 yd	10 mm 0.39 inch	0.14-1.5 mm^2 AWG 26-16	0.14-1.5 mm^2 AWG 26-16	0.14-1 mm^2 AWG 26-18	0.14-1.5 mm^2 AWG 26-16	Single conductor possible

LAN connections
Fronius recommends using at least CAT 5 STP (shielded twisted pair) cables and a maximum distance of 100 m (109 yd).

Cross section of the AC cable

For a standard M32 metric screw joint with a reducer:
Cable diameter from 7-15 mm

When using an M32 metric screw joint (reducer removed):
cable diameter from 11-21 mm
(with a cable diameter of less than 11 mm, the strain-relief force is reduced from 100 N to a maximum of 80 N)

With cable diameters greater than 21 mm, the M32 screw joint must be replaced by an M32 screw joint with a larger clamping area – item number: 42,0407,0780 – strain-relief device M32 x 1.5 KB 18–25.

Cross section of the DC cable

Cable diameter for the strain-relief device: max. 9 mm.
Cable diameter for the connection to the push-in terminal: max. 6 mm

IMPORTANT!
For double-insulated cables with a cable diameter over 6 mm, the external insulation layer must be removed to connect to the push-in terminal.

Maximum alternating current fuse protection

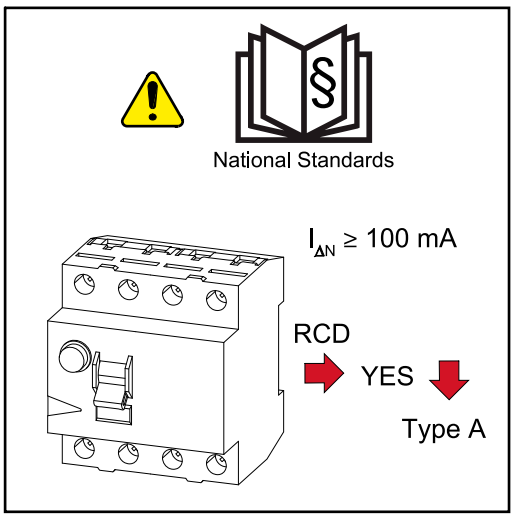

NOTE!

National regulations, the grid operator's specifications or other factors may require a residual current circuit breaker in the AC connection lead.
For this situation, a type A residual-current circuit breaker is generally adequate. Nevertheless, false alarms can be triggered for the type A residual current circuit breaker in individual cases and depending on local conditions. For this reason, in accordance with national legislation, Fronius recommends that a residual current circuit breaker with a tripping current of at least 100 mA suitable for frequency converters be used.

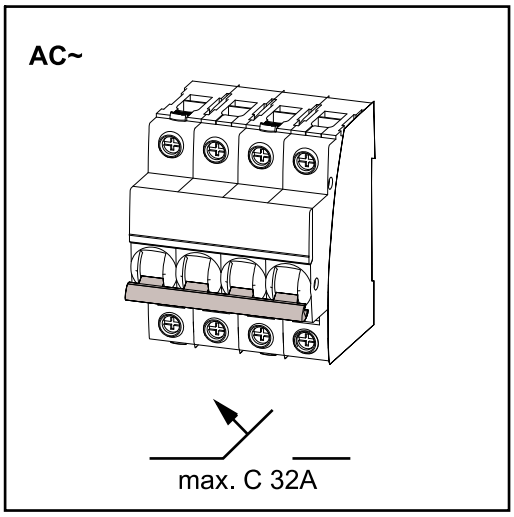

IMPORTANT!
The inverter can be used with max. an automatic circuit breaker C 32 A.

Inverter	Phases	AC output	Maximum fuse rating	Recommended fuse rating
Fronius Symo GEN24 6 kW	3	6000 W	C 32 A	C 16 A
Fronius Symo GEN24 8 kW	3	8000 W	C 32 A	C 25 A
Fronius Symo GEN24 10 kW	3	10,000 W	C 32 A	C 32 A

Connecting the inverter to the public grid (AC side)

Safety

⚠ WARNING!

Danger due to incorrect operation and incorrectly performed work.
This can result in serious injury and damage to property.
- ▶ Read the Installation and Operating Instructions before installing and commissioning the equipment.
- ▶ Only qualified personnel are authorised to commission your inverter and only within the scope of the respective technical regulations.

⚠ WARNING!

Danger due to grid voltage and DC voltage from solar modules that are exposed to light.
An electric shock can be fatal.
- ▶ Prior to any connection work, disconnect the inverter on the AC side and the DC side.
- ▶ Only an authorised electrical engineer is permitted to connect this equipment to the public grid.

⚠ WARNING!

Danger due to damaged and/or contaminated terminals.
This can result in serious injury and damage to property.
- ▶ Before making any connections, check the terminals for damage and contamination.
- ▶ Remove contamination in the de-energized state.
- ▶ Have defective terminals repaired by an authorised specialist.

Connecting the inverter to the public grid (AC side)

NOTE!

The neutral conductor must be connected in order to operate the inverter.
It is not possible to operate the inverter in unearthed grids, such as IT grids (insulated grids without ground conductor).
- ▶ Make sure that the grid's neutral conductor is grounded.

IMPORTANT!
The ground conductor of the AC cable must be laid in such a way that it is the last to be disconnected in the event that the strain-relief device should fail.
This can be ensured by making it somewhat longer and by laying it in a loop.

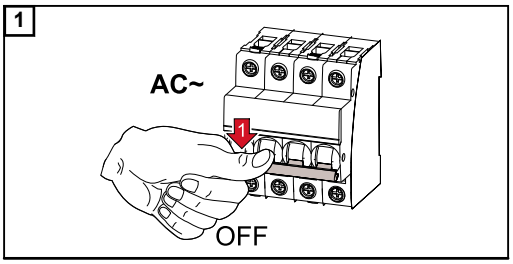

Turn off the automatic circuit breaker.

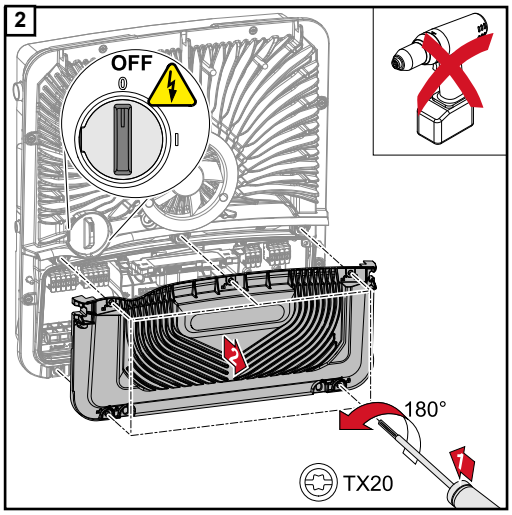

Make sure that the DC disconnector is in the "Off" switch setting.
Loosen the five screws of the connection area cover by rotating them 180° to the left using a screwdriver (TX20).
Remove the connection area cover from the device.

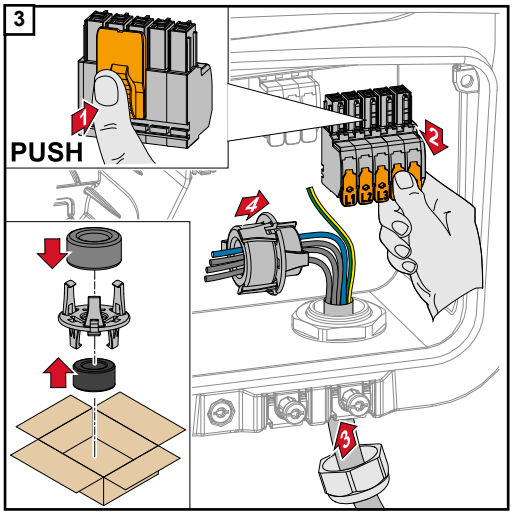

Press the lock on the back of the terminal and remove the AC terminal.
Route the mains cable from below through the strain-relief device located on the right side and the ferrite core.

IMPORTANT!
The ground conductor must not be routed through the ferrite core and must be connected with a loop so that if the strain relief device fails, the ground conductor is disconnected last.
For more information on the strain relief device, see chapter **Cross section of the AC cable** on page **56**.

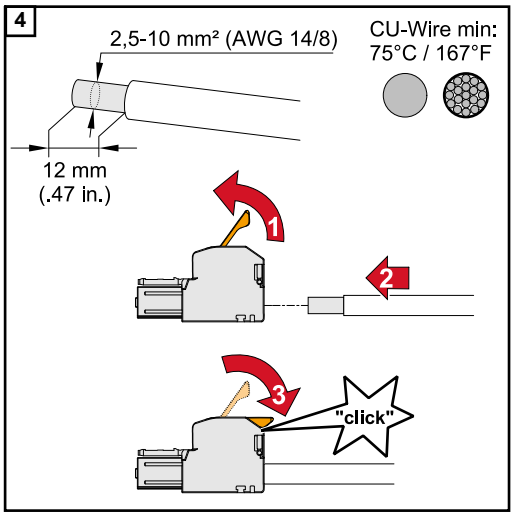

Strip the insulation of the single conductors by 12 mm.
The cable cross section must be selected in accordance with the instructions in **Permitted cables** from page **55**.
Lift to open the terminal's operating lever and insert the stripped single conductor into the slot provided as far as it will go.
Then close the operating lever until it engages.

IMPORTANT!
Only one conductor may be connected to each pin. The AC cables can be connected to the AC terminal without ferrules.

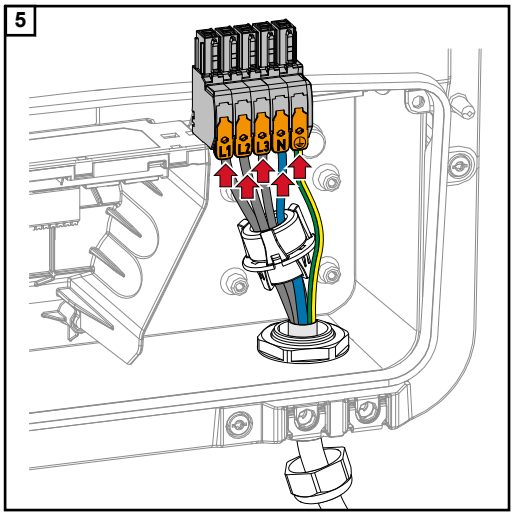

L1	Phase conductor
L2	Phase conductor
L3	Phase conductor
N	Neutral conductor
PE	Ground conductor

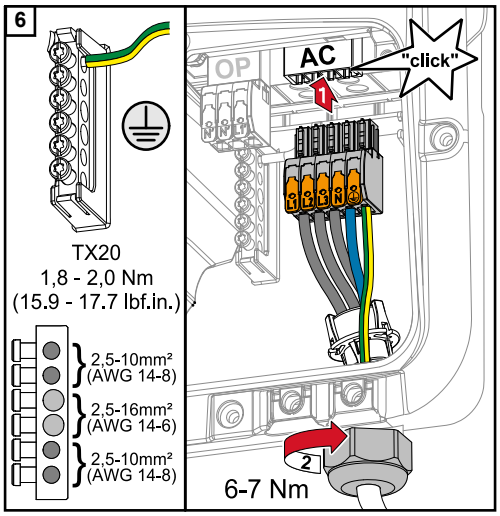

Insert the AC terminal into the AC slot until it engages. Fasten the union nut of the strain-relief device with a torque of 6-7 Nm.

Connecting solar module strings to the inverter

General comments regarding solar modules

To enable suitable solar modules to be chosen and to use the inverter as efficiently as possible, it is important to bear the following points in mind:

- If insolation is constant and the temperature is falling, the open circuit voltage of the solar modules will increase. The open circuit voltage must not exceed the maximum permissible system voltage. If the open circuit voltage exceeds the specified values, the inverter will be destroyed and all warranty claims will be forfeited.
- The temperature coefficients on the data sheet of the solar modules must be observed.
- Exact values for sizing the solar modules can be obtained using suitable calculation tools, such as the **Fronius Solar.configurator**.

IMPORTANT!
Before connecting up the solar modules, check that the voltage for the solar modules specified by the manufacturer corresponds to the actual measured voltage.

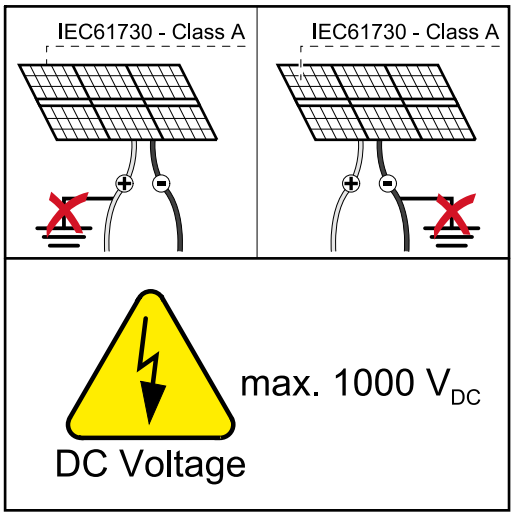

IMPORTANT!
The solar modules connected to the inverter must comply with the IEC 61730 Class A standard.

IMPORTANT!
Solar module strings must not be earthed.

Safety

WARNING!

Incorrect operation or poorly executed work can cause serious injury or damage.
Commissioning as well as maintenance and service work in the power module of the inverter must only be carried out by service personnel trained by Fronius and only within the scope of the respective technical regulations. Read the Installation and Operating Instructions before installing and commissioning the equipment.

WARNING!

An electric shock can be fatal.
Danger due to grid voltage and DC voltage from solar modules that are exposed to light.

▶ Ensure that the AC and DC side of the inverter are de-energised before carrying out any connection/maintenance or service tasks.
▶ Only an authorised electrical engineer is permitted to connect this equipment to the public grid.

WARNING!

Danger due to damaged and/or contaminated terminals.
This can result in serious injury and damage to property.

- ▶ Before making any connections, check the terminals for damage and contamination.
- ▶ Remove contamination in the de-energized state.
- ▶ Have defective terminals repaired by an authorised specialist.

PV generator - general information

2 independent PV inputs (PV 1 and PV 2) are available. These can be connected to a different number of modules.

When using for the first time, set up the PV generator according to the respective configuration (also possible later in the “System configuration” menu under the “Components” menu item).

PV generator configuration 6 - 10 kW

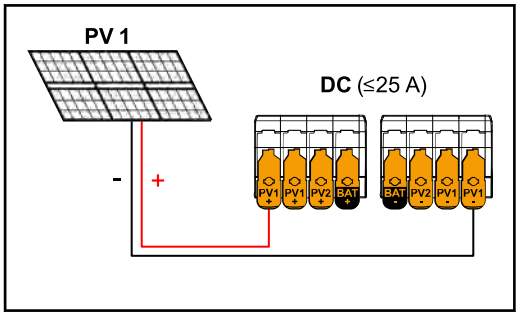

Total current less than or equal to 25 A.

PV generator settings:
PV 1: **ON**
PV 2: **OFF**

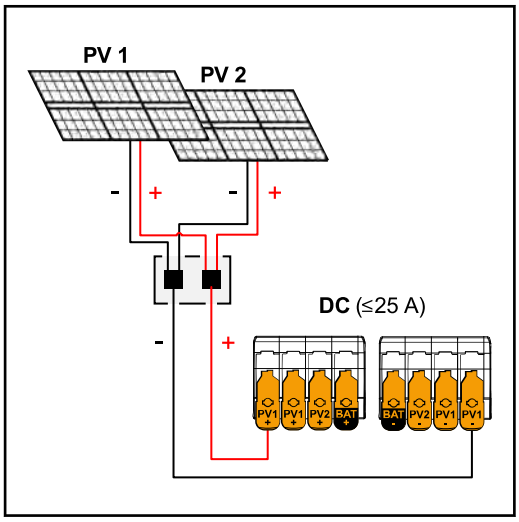

Combined solar module strings with total current less than or equal to 25 A.

PV generator settings:
PV 1: **ON**
PV 2: **OFF**

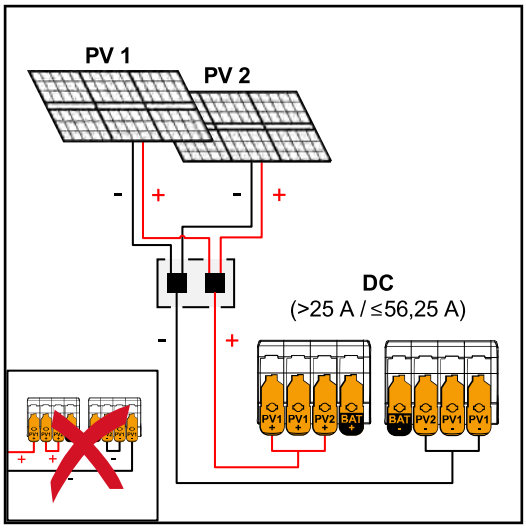

Combined solar module strings with total current greater than 25 A.

PV generator settings:
PV 1: **ON**
PV 2: **OFF**
PV 1 + PV 2 (connected in parallel): **ON**

IMPORTANT!
The maximum current load of a single terminal is 25 A. PV-connection strings with a total current of more than 25 A must be split between both PV inputs upstream of the terminals (≤ 56.25 A). The plug connection for splitting the total current must be sufficiently dimensioned, suitable and correctly installed. Splitting the current by bridging from PV 1 to PV 2 at the terminal is not permitted.

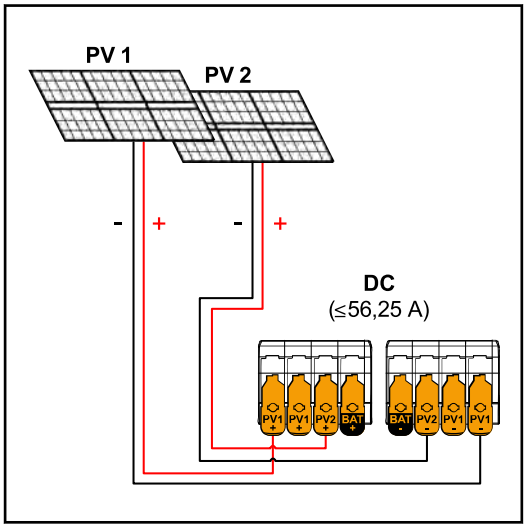

PV 1 (I_{dcmax}) = 37.5 A / PV 2 (I_{dcmax}) = 18.75 A

PV generator settings:
PV 1: **ON**
PV 2: **ON**

Connecting the solar module strings to the inverter

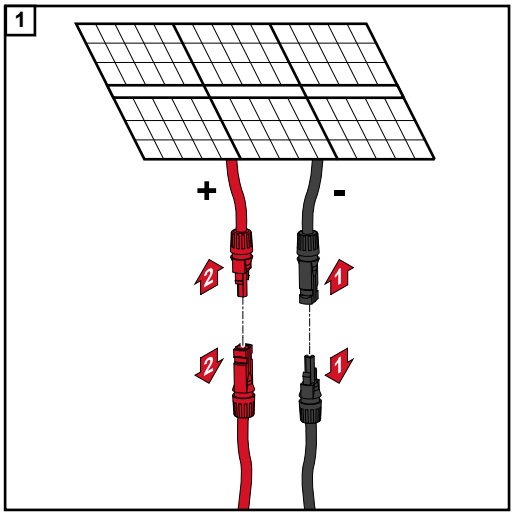

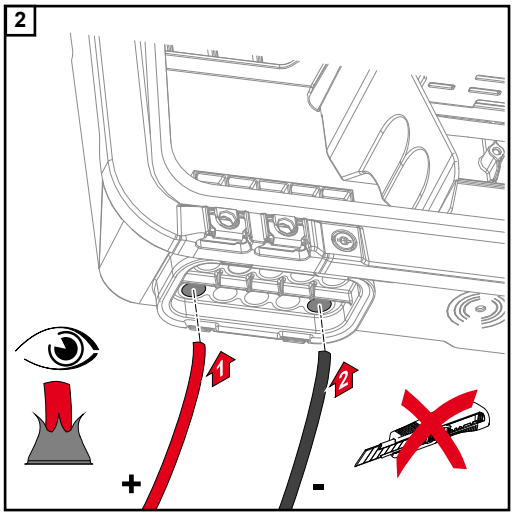

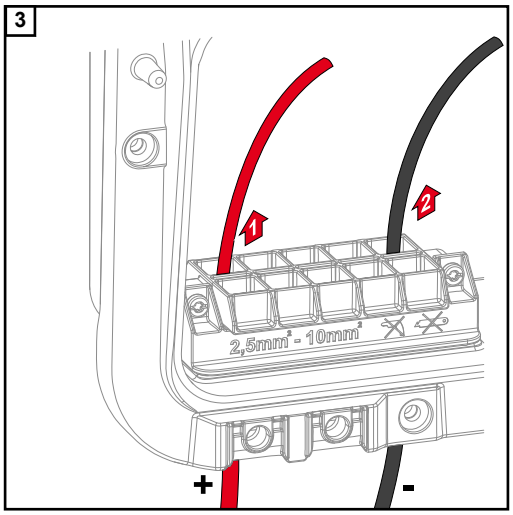

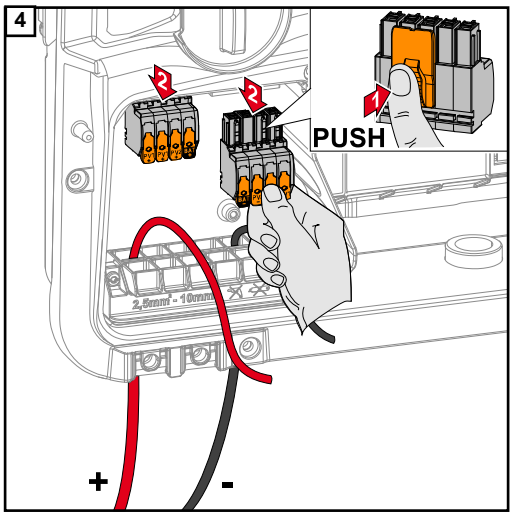

Push the DC cables through the DC bushings by hand.

IMPORTANT!
Before stripping the insulation, push the cables through the DC bushings to prevent individual wires being bent or broken.

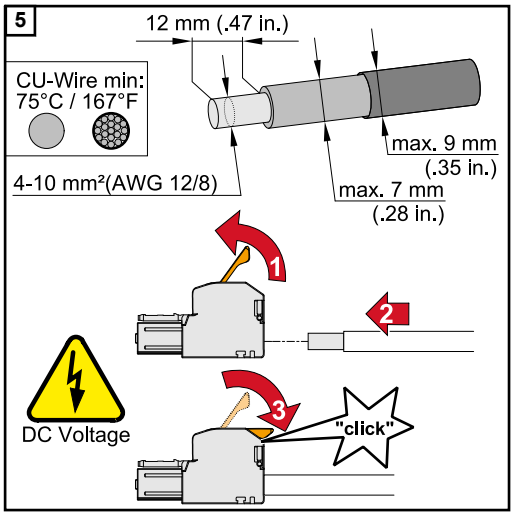

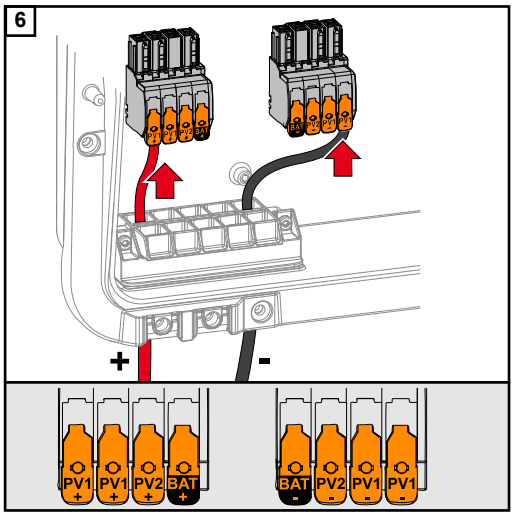

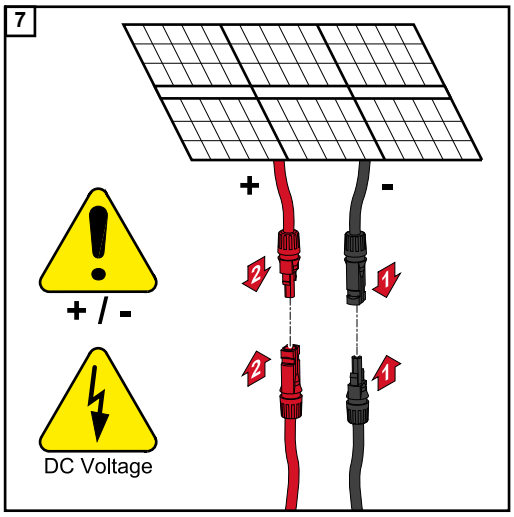

Select the cable cross section in accordance with the instructions in **Permitted cables** from page **55**.
Strip the insulation of the single conductors by 12 mm. Lift to open the terminal's operating lever and insert the stripped single conductor into the slot provided, in each case as far as it will go. Then close the operating lever until it engages.

NOTE!

No multi-wire connections are possible with this terminal type.
Only one conductor may be connected to each pin. The DC cables can be connected to the DC terminals without ferrules.

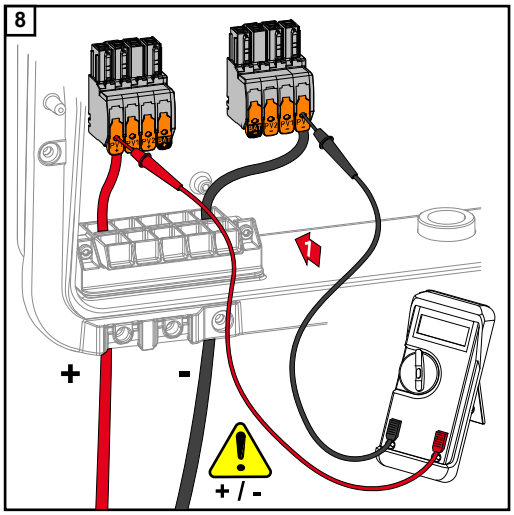

Use a suitable measuring instrument to check the voltage and polarity of the DC cabling. Remove both DC terminals from the slots.

⚠ CAUTION!

Danger due to polarity reversal at the terminals.
This may result in severe damage to the inverter.

- ▶ Use a suitable measuring instrument to check the polarity of the DC cabling.
- ▶ Use a suitable measuring instrument to check the voltage (**max. 1000 V_{DC}**)

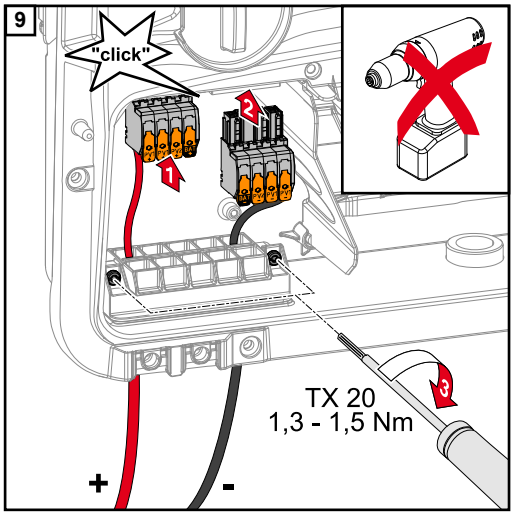

Insert the DC terminals into the respective slot until they engage. Fasten the screws of the cable guide to the housing using a screwdriver (TX20) and a torque of 1.3-1.5 Nm.

NOTE!

Do not use a drill driver as this could cause overturning.
A possible consequence of overturning is, for example, damaging the strain-relief device.

Connecting the battery to the inverter

Safety

WARNING!

Incorrect operation or poorly executed work can cause serious injury or damage.
Commissioning as well as maintenance and service work on the inverter and battery must only be carried out by service personnel trained by the respective inverter or battery manufacturer and only within the scope of the respective technical regulations. Read the Installation and Operating Instructions provided by the respective manufacturer before installing and commissioning the equipment.

WARNING!

An electric shock can be fatal.
Danger due to grid voltage and DC voltage from solar modules that are exposed to light and from batteries.

- ▶ Ensure that the AC and DC side of the inverter and the battery are de-energised before carrying out any connection/maintenance or service tasks.
- ▶ Only an authorised electrical engineer is permitted to connect this equipment to the public grid.

WARNING!

Danger due to damaged and/or contaminated terminals.
This can result in serious injury and damage to property.

- ▶ Before making any connections, check the terminals for damage and contamination.
- ▶ Remove contamination in the de-energized state.
- ▶ Have defective terminals repaired by an authorised specialist.

Connecting the battery on the DC side

CAUTION!

Risk due to operation of the battery above the permissible altitude as specified by the manufacturer.
Operating the battery above the permissible altitude can result in restricted operation, failure of the operation, and unsafe states of the battery.

- ▶ Adhere to the manufacturer's instructions regarding the permissible altitude.
- ▶ Operate the battery only at the altitude specified by the manufacturer.

IMPORTANT!
Prior to installing a battery, ensure that the battery is switched off. Refer to the manufacturer's documents for the max. length of the DC cables for installing third-party batteries.

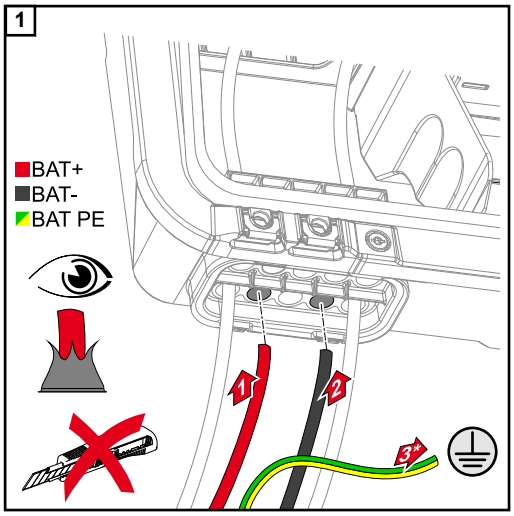

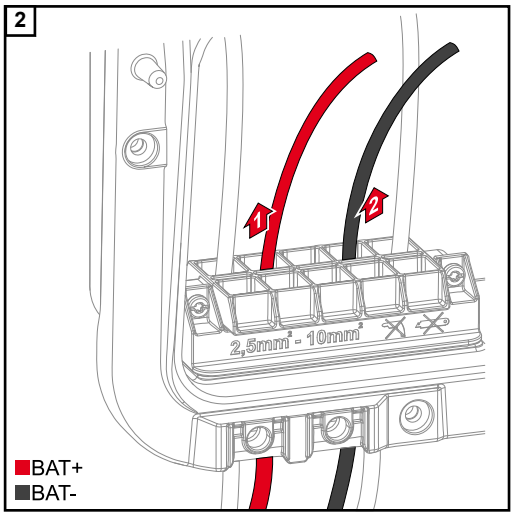

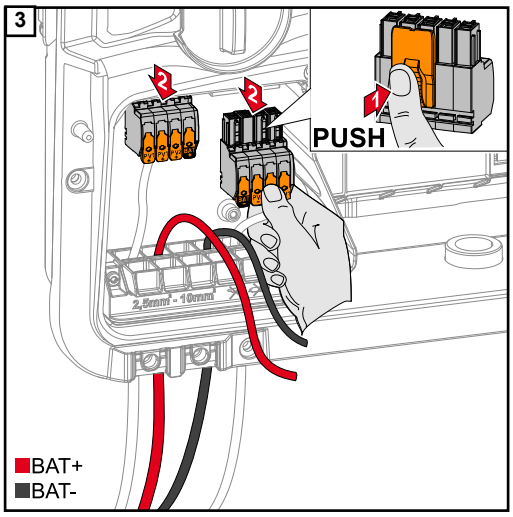

Manually push the BAT cables through the DC bushings.

* Connect the ground conductor of the battery to an external point (e.g. switch cabinet). In doing so, the minimum cross section of the battery's ground conductor must be observed.

IMPORTANT!
Before stripping the insulation, push the cables through the DC bushings to prevent individual wires being bent or broken.

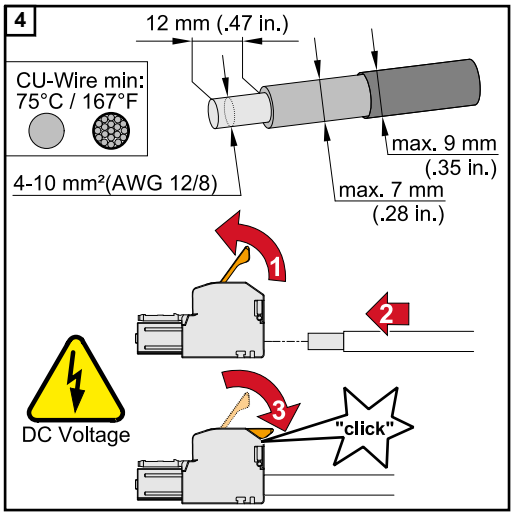

Select the cable cross section in accordance with the instructions in **Permitted cables** from page **55**.
Strip the insulation of the single conductors by 12 mm. Lift to open the terminal's operating lever and insert the stripped single conductor into the slot provided, in each case as far as it will go. Then close the operating lever until it engages.

NOTE!

No multi-wire connections are possible with this terminal type.
Only one conductor may be connected to each pin. The DC cables can be connected to the DC terminals without ferrules.

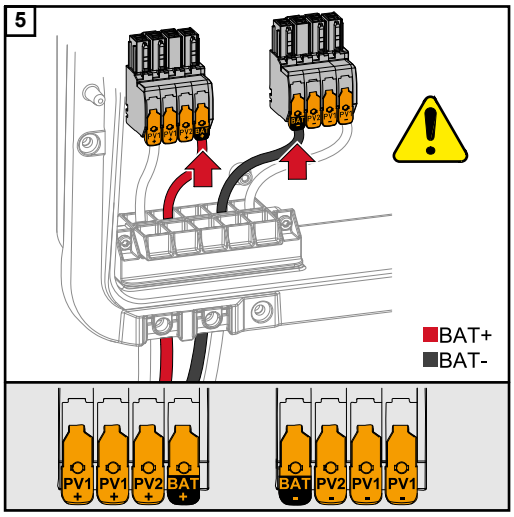

⚠ **CAUTION!**

Risk due to overvoltage when using other slots on the terminal.
This may result in damage to the battery and/or the solar module due to discharge.

- ▶ Only use the designated slots for battery connection.

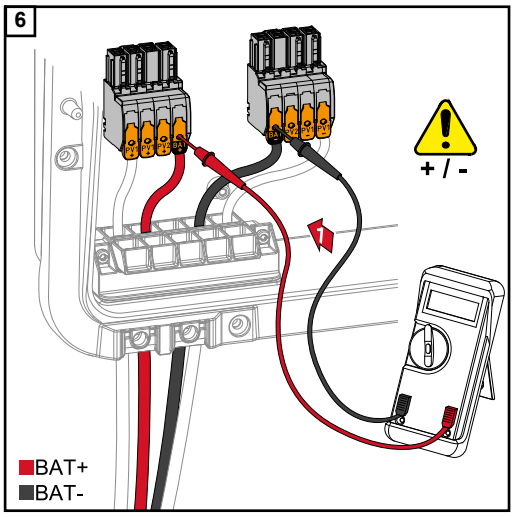

⚠ **CAUTION!**

Danger due to polarity reversal at the terminals.
Serious substantive damage to the PV system may result.

- ▶ Use a suitable measuring instrument to check the polarity of the DC cabling when the battery is switched on.
- ▶ The maximum voltage for the battery input must not be exceeded (see **Technical data** on page **137**).

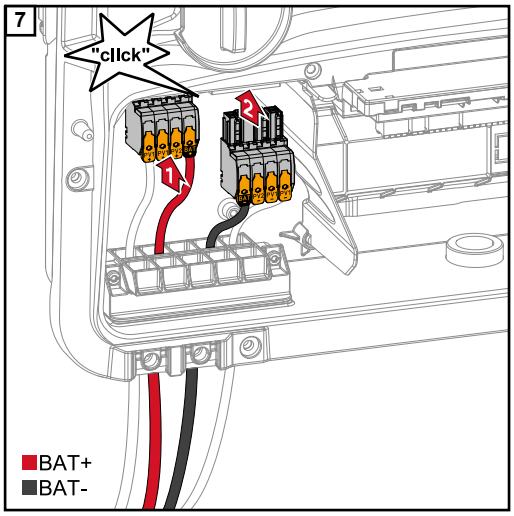

Insert the DC terminals into the respective slot until they engage.

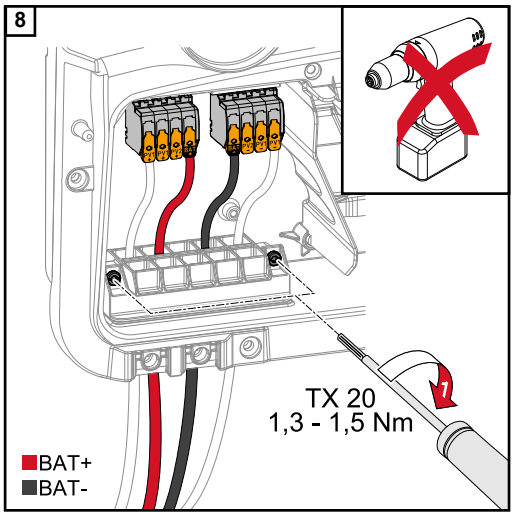

Fasten the screws of the cable guide to the housing using a screwdriver (TX20) and a torque of 1.3-1.5 Nm.

NOTE!

Do not use a drill driver as this could cause overturning.
A possible consequence of overturning is, for example, damaging the strain-relief device.

IMPORTANT!
Information for connection on the battery side can be found in the Installation Instructions from the relevant manufacturer.

Connecting backup power - PV Point (OP)

Safety

IMPORTANT!
The valid national laws, standards and provisions, as well as the specifications of the relevant grid operator are to be taken into account and applied.
It is highly recommended that the specific installation be agreed with the grid operator and explicitly approved by this operator. This obligation applies to system constructors in particular (e.g. installers).

NOTE!

The supply via the PV Point is not interruption-free.
If the solar modules are not supplying enough power, interruptions may occur.
- ▶ Do not connect any loads that require an interruption-free supply.

⚠ **WARNING!**

Danger from incorrect installation, commissioning, operation or incorrect use.
This can result in severe personal injury/damage to property.
- ▶ Only trained and qualified personnel are authorised to install and commission the system, and only within the scope of the technical regulations.
- ▶ The Installation and Operating Instructions must be read carefully prior to use.
- ▶ If anything is unclear, contact your vendor immediately.

⚠ **WARNING!**

Danger due to damaged and/or contaminated terminals.
This can result in serious injury and damage to property.
- ▶ Before making any connections, check the terminals for damage and contamination.
- ▶ Remove contamination in the de-energized state.
- ▶ Have defective terminals repaired by an authorised specialist.

Installation

NOTE!

All loads that have to be supplied via the OP terminal must be protected by means of a residual current circuit breaker.
In order to ensure the residual current circuit breaker operates properly, a connection must be established between the neutral conductor N' (OP) and the earth.

For the Circuit Diagram recommended by Fronius, see **Circuit Diagram - PV Point (OP)** on page **143**.

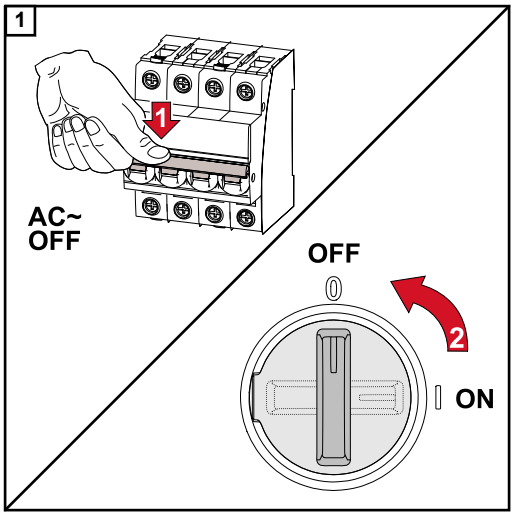

Switch off the automatic circuit breaker and DC disconnector.

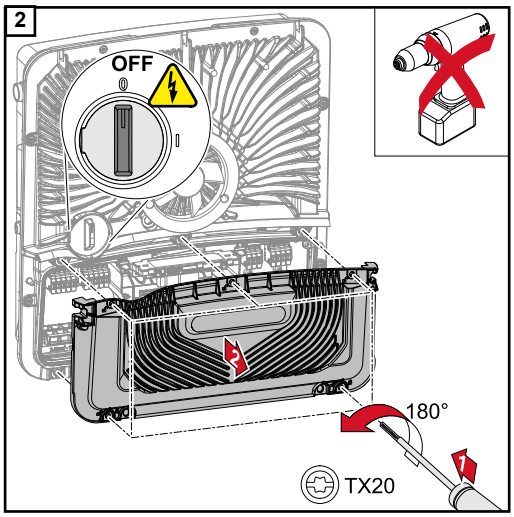

Make sure that the DC disconnector is in the "Off" switch setting.
Loosen the five screws of the connection area cover by rotating them 180° to the left using a screwdriver (TX20).
Remove the connection area cover from the device.

⚠ CAUTION!

Danger from faulty or incorrect holes.
This may lead to injuries to the eyes and hands as a result of flying debris and sharp edges, as well as damage to the inverter.

- ▶ When drilling, wear suitable protective goggles.
- ▶ Only use a step drill when drilling.
- ▶ Ensure that nothing is damaged inside the device (for example connection block).
- ▶ Adapt the diameter of the hole to match the corresponding connection.
- ▶ Deburr the holes using a suitable tool.
- ▶ Remove the drilling residues from the inverter.

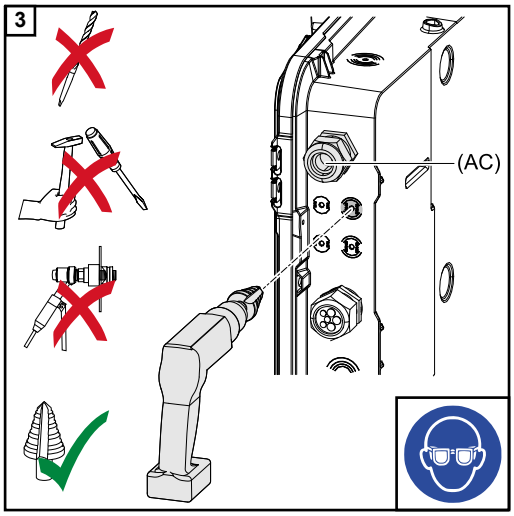

Drill out the optional cable guide with a step drill.

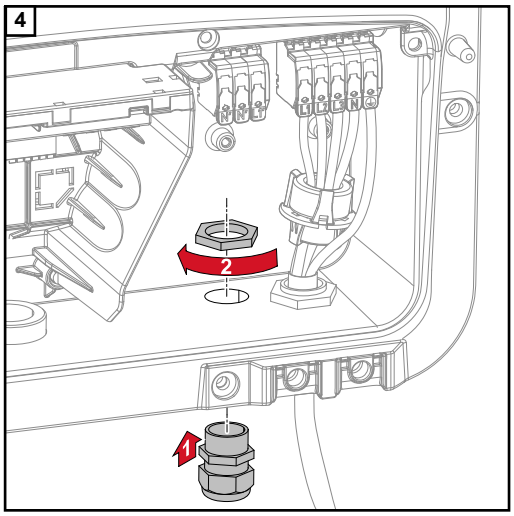

Insert the strain-relief device into the hole and secure to the torque specified by the manufacturer.

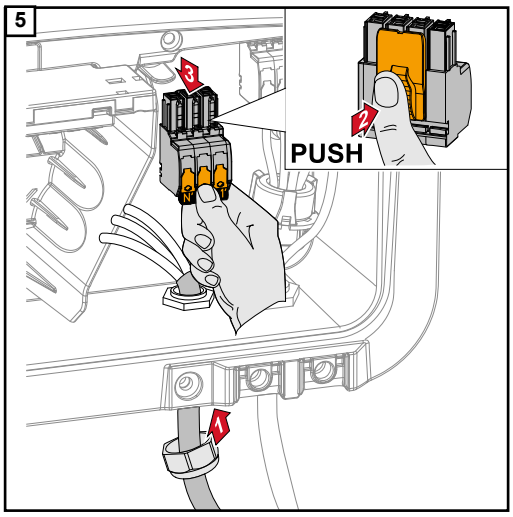

Guide the mains cable through the strain-relief device from below.
Remove the OP terminal.

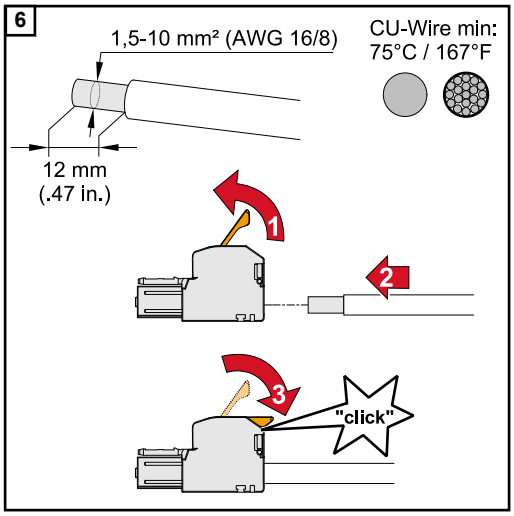

Strip the insulation of the single conductors by 12 mm.
The cable cross section must be between 1.5 mm^2 and 10 mm^2. Lift to open the terminal's operating lever and insert the stripped single conductor into the slot provided, all the way up to the stop. Then close the operating lever until it engages.

NOTE!

Only one conductor may be connected to each pin. The conductors can be connected without ferrules.

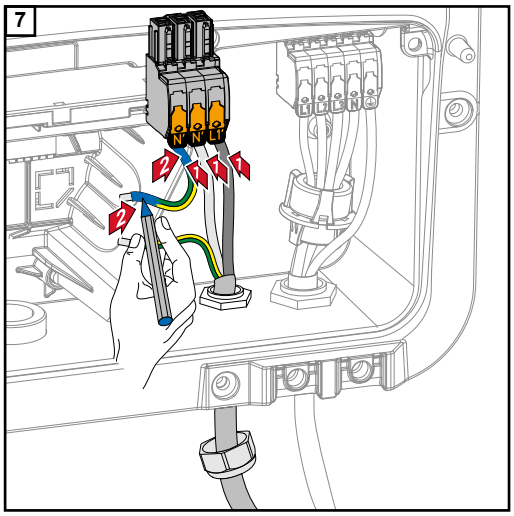

L1´	Phase conductor
N´	Neutral conductor
N´	PEN conductor

NOTE!

The PEN conductor must be produced with ends that are permanently marked blue, according to the national provisions, and have a cross section of 10 mm².

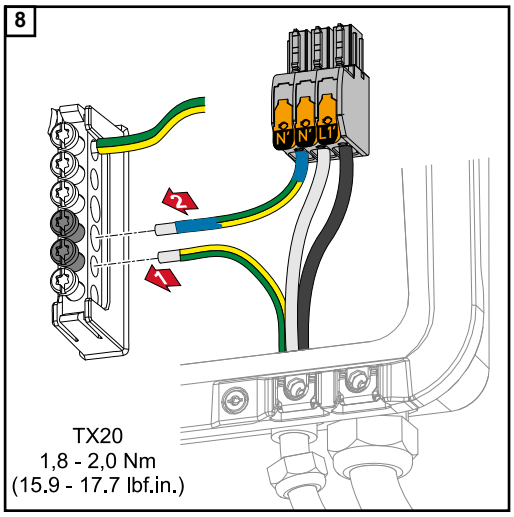

Fasten the ground conductor and PEN conductor to the ground electrode terminal using a screwdriver (TX20) and a torque of 1.8-2 Nm.

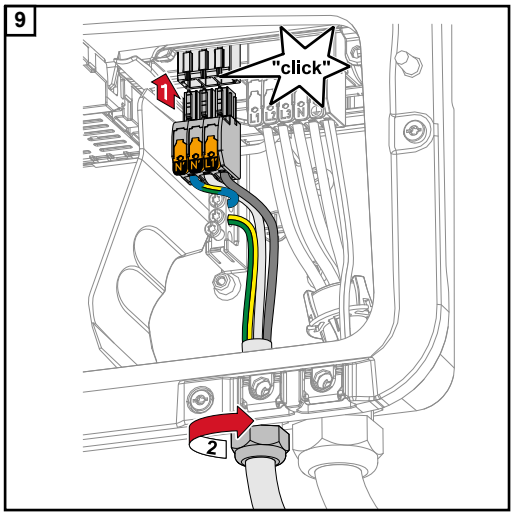

Insert the OP terminal into the OP slot until it engages. Tighten the union nut of the strain-relief device to the torque specified by the manufacturer.

EN

Connecting backup power - Full Backup

Safety

The examples given in this document (in particular cabling variants and Circuit Diagrams) are suggestions only. These examples have been carefully developed and tested. They can therefore be used as a basis for real-life installation. Anyone following or using these examples does so at their own risk.

IMPORTANT!
The valid national laws, standards and provisions, as well as the specifications of the relevant grid operator are to be taken into account and applied.
It is highly recommended to coordinate the concrete examples implemented and in particular the specific installation with the grid operator to obtain their explicit approval. This obligation applies to system constructors in particular (e.g. installers).
The examples suggested here show a backup power supply with or without an external protection relay (external grid and system protection unit). Whether an external protection relay must be used or not is the decision of the respective grid operator.

IMPORTANT!
No uninterruptible power supply (UPS) must be operated in the backup power circuit.
The Installation and Operating Instructions must be read carefully prior to use. If anything is unclear, contact your vendor immediately.

⚠ **WARNING!**

Danger from incorrect installation, commissioning, operation or incorrect use.
This can result in severe personal injury/damage to property.
- ▶ Only trained and qualified personnel are authorised to install and commission the system, and only within the scope of the technical regulations.
- ▶ The Installation and Operating Instructions must be read carefully prior to use.
- ▶ If anything is unclear, contact your vendor immediately.

Cabling variants including backup power circuits with 3-pin separation e.g. Austria or Australia

Circuit Diagram
The Circuit Diagram for the 3-pin double separation - e.g. Austria, can be found on page **145** in the appendix of this document.
The Circuit Diagram for the 3-pin single separation - e.g. Australia, can be found in the appendix of this document on page **146**.

Cabling of backup power circuit and non-backup power circuits

If not all the loads in the home need to be supplied in a backup power situation, the circuits need to be divided into backup power circuits and non-backup power circuits. The total load of the backup power circuits must not exceed the nominal output of the inverter.

The backup power circuits and non-backup power circuits must be fused separately according to the required safety measures (residual-current circuit breaker, automatic circuit breaker, etc.).
In backup power mode, only the backup power circuits are disconnected from the grid by contactors K1 and K2, 3-pin. The rest of the home network is not supplied with power in this case.

The following points regarding cabling must be considered:

- The main contacts of contactors K1 and K2 must be installed between the Fronius Smart Meter and the inverter and the residual-current circuit breaker of the backup power circuits.
- The supply voltage for contactors K1 and K2 is provided by the public grid and must be connected to phase 1 (L1) after the Fronius Smart Meter and fused accordingly.
- An NC contact for the relay K3 interrupts the supply voltage to contactors K1 and K2. This prevents the backup power network of the inverter from being switched to the public grid.
- The NO contact of relay K3 gives feedback to the inverter on whether the locking was successfully performed by relay K3.
- Additional inverters or other AC sources can be installed in the backup power circuit after the main contacts of K1 and K2. The sources are not synchronised to the network of the inverter because this backup power network has a frequency of 53 Hz.
- The use of contactor K2 is optional in Australia.

Al-pin separation cabling variant e.g. Germany, France, Spain

Circuit Diagram

The Circuit Diagram for the 4-pin double separation - e.g. Germany, can be found in the appendix of this document on page **148**

The Circuit Diagram for the 4-pin single separation - e.g. France and Spain, can be found in the appendix of this document on page **149**.

Cabling of backup power circuit and non-backup power circuits

If not all the loads in the home need to be supplied in a backup power situation, the circuits need to be divided into backup power circuits and non-backup power circuits. The total load of the backup power circuits must not exceed the nominal output of the inverter.

The backup power circuits and non-backup power circuits must be fused separately according to the required safety measures (residual-current circuit breaker, automatic circuit breaker, etc.).

In backup power mode, only the backup power circuits are disconnected at all pins from the grid by contactors K1 and K2; an earth connection is only established for these circuits. The rest of the home network is not supplied with power in this case.

The following points regarding cabling must be considered:

- The main contacts of contactors K1 and K2 must be installed between the Fronius Smart Meter and the residual-current circuit breaker of the inverter and the residual-current circuit breaker of the backup power circuits.
- The supply voltage for contactors K1 and K2 is provided by the public grid and must be connected to phase 1 (L1) after the Fronius Smart Meter and fused accordingly.
- To ensure residual-current circuit breakers function in backup power mode, the connection between the neutral conductor and the ground conductor must be established as close as possible to the inverter, but in any case before the first residual-current circuit breaker. An NC contact is used for this purpose for each of the main contacts of contactors K4 and K5. This ensures that the ground connection is established as soon as the public grid connection is no longer available.
- As with contactor K1, the supply voltage for contactors K4 and K5 is provided via phase 1 (L1) of the public grid.
- An NC contact for the relay K3 interrupts the supply voltage to contactors K1, K2, K4 and K5. This prevents the ground connection from being immediately disconnected again when power returns to the public grid and the backup power network of the inverter from being switched to the public grid.
- The NO contact of relay K3 gives feedback to the inverter on whether the locking was successfully performed by relay K3.
- The use of contactor K2 is optional in France.
- Additional inverters or other AC sources can be installed in the backup power circuit after the main contacts of K1 and K2. The sources are not synchronised to the network of the inverter because this backup power network has a frequency of 53 Hz.

All-pin separation cabling variant, e.g. Italy

Circuit Diagram

The Circuit Diagram for the 4-pin double separation with ext. grid and system protection - e.g. Italy, can be found on page **150** in the appendix of this document.

Backup power circuit and non-backup power circuits

IMPORTANT!

Fronius Smart Meter US-480 must be used for these circuit variants.

The backup power circuits and non-backup power circuits must be fused separately according to the required safety measures (residual-current circuit breaker, automatic circuit breaker, etc.).

In backup power mode, only the backup power circuits are disconnected from the grid by contactors K1 and K2; an earth connection is only established for these circuits. The rest of the home network is not supplied with power in this case.

The following points regarding cabling must be considered:

- The main contacts of contactors K1 and K2 must be installed between the Fronius Smart Meter and the residual-current circuit breaker of the inverter and the residual-current circuit breaker of the backup power circuits.
- The supply voltage for contactors K1 and K2 is provided by the public grid and must be connected to phase 1 (L1) after the Fronius Smart Meter and fused accordingly.
- Actuation of contactors K1 and K2 is carried out by the external grid and system protection unit.
- The external grid and system protection unit must be installed after the Fronius Smart Meter. Precise installation and wiring instructions for the external grid and system protection unit can be found in its separate Operating Instructions.
- The remote trip input of the external grid and system protection unit must be set to NC according to the manufacturer's Operating Instructions.
- To ensure residual-current circuit breakers function in backup power mode, the connection between the neutral conductor and the ground conductor must be established as close as possible to the inverter, but in any case before the first residual-current circuit breaker. An NC contact is used for this purpose for the main contacts of contactors K4 and K5. This ensures that the ground connection is established as soon as the public grid connection is no longer available.
- The supply voltage for contactors K1, K2, K4 and K5 is provided via phase 1 (L1) of the public grid and is switched via the external grid and system protection unit.
- An NC contact for relay K3, which activates the remote input of the external grid and system protection unit, interrupts the supply voltage to contactors K1, K2, K4 and K5. This prevents the ground connection from being immediately disconnected again when power returns to the public grid and the backup power network of the inverter from being switched to the public grid.
- The NO contact of relay K3 gives additional feedback to the inverter on whether the locking was successfully performed by relay K3.
- Additional inverters or other AC sources can be installed in the backup power circuit after the main contacts of K1 and K2. The sources are not synchronised to the network of the inverter because this backup power network has a frequency of 53 Hz.

Testing backup power mode

Backup power mode should be tested once it has been installed and set up for the first time. A battery state of charge of over 30% is recommended when in test mode.

A description on how to run test mode can be found in the **backup power checklist** (https://www.fronius.com/en/search-page, item number: 42,0426,0365).

Connecting the data communication cable

Modbus participants

The inputs M0 and M1 can be selected for this purpose. A maximum of 4 Modbus participants can be connected to the Modbus terminal on inputs M0 and M1.

IMPORTANT!
Only one primary meter, one battery and one Ohmpilot can be connected per inverter. Due to the high data transfer of the battery, the battery occupies 2 participants. If the "Inverter control via Modbus" function is activated in the "Communication""Modbus" menu, no Modbus participants are possible. It is not possible to send and receive data at the same time.

Example 1:

Input	Battery	Fronius Ohmpilot	Quantity Primary meter	Quantity Secondary meter
Modbus 0 (M0)	✗	✗	0	4
	✓	✗	0	2
	✓	✓	0	1
Modbus 1 (M1)	✗	✗	1	3

Example 2:

Input	Battery	Fronius Ohmpilot	Quantity Primary meter	Quantity Secondary meter
Modbus 0 (M0)	✗	✗	1	3
Modbus 1 (M1)	✗	✗	0	4
	✓	✗	0	2
	✓	✓	0	1

Routing data communication cables

IMPORTANT!
If data communication cables are wired into the inverter, observe the following points:
- Depending on the number and cross section of the wired data communication cables, remove the corresponding blanking plugs from the sealing insert and insert the data communication cables.
- Make sure that you insert the corresponding blanking plugs into any free openings on the sealing insert.

IMPORTANT!
Should the blanking plugs be missing or improperly fitted, then protection class IP66 cannot be guaranteed.

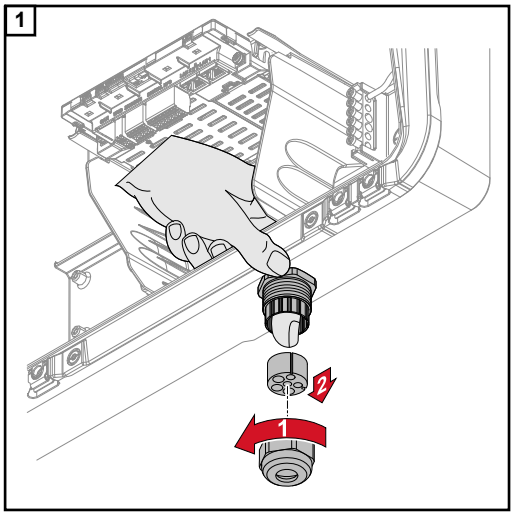

Undo the strain-relief device union nut and push out the sealing ring and the blanking plug from the inside of the device.

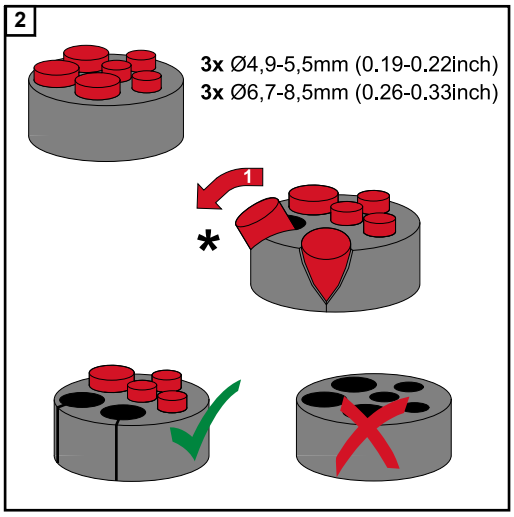

Open up the sealing ring at the location where the blanking plug is to be removed.

* Liberate the blanking plug by moving it sideways.

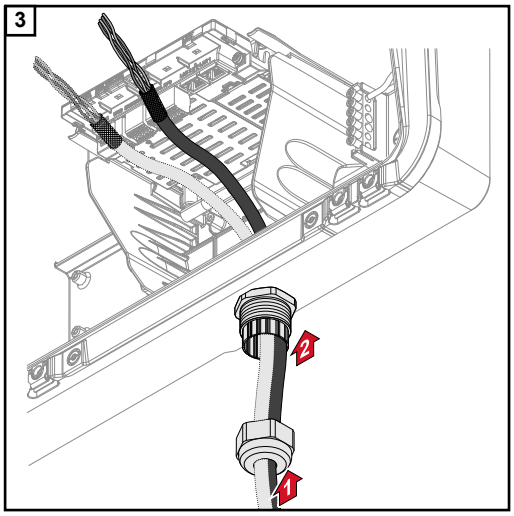

Guide the data cables first through the strain-relief device union nut and then through the housing opening.

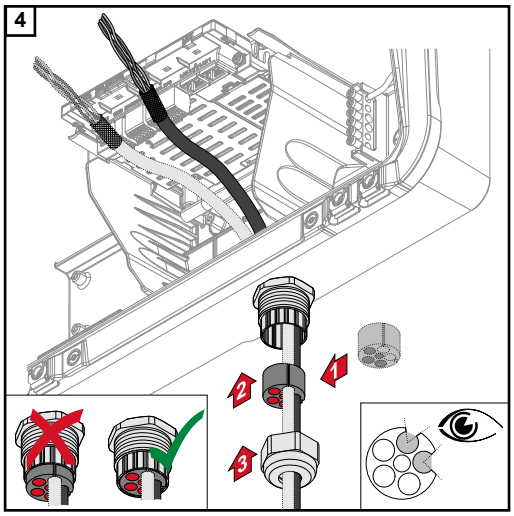

Insert the sealing ring between the union nut and the housing opening. Press the data cables into the seal's cable guide. Then press in the seal until it reaches the underside of the strain-relief device.

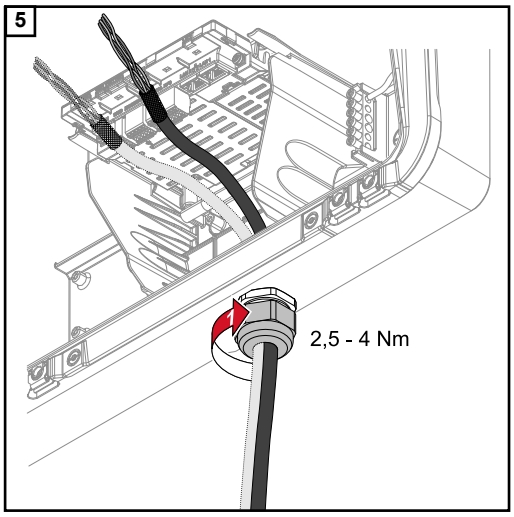

Fasten the union nut of the strain-relief device with a torque of min. 2.5 - max. 4 Nm.

Connecting the battery communication cables

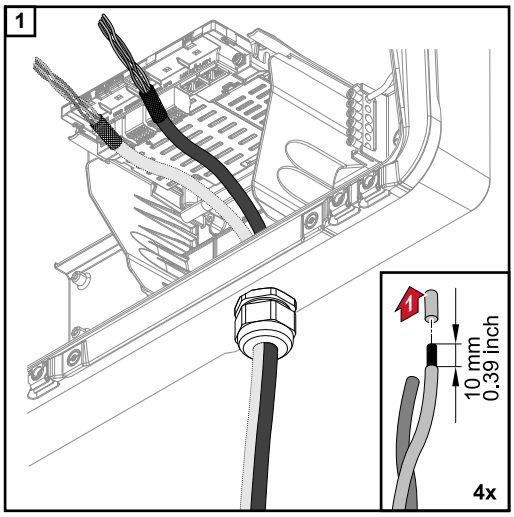

Strip 10 mm from the single conductors and mount the ferrules if necessary.

IMPORTANT!
Connect the individual conductors to an appropriate ferrule if several individual conductors are connected to one input of the push-in terminals.

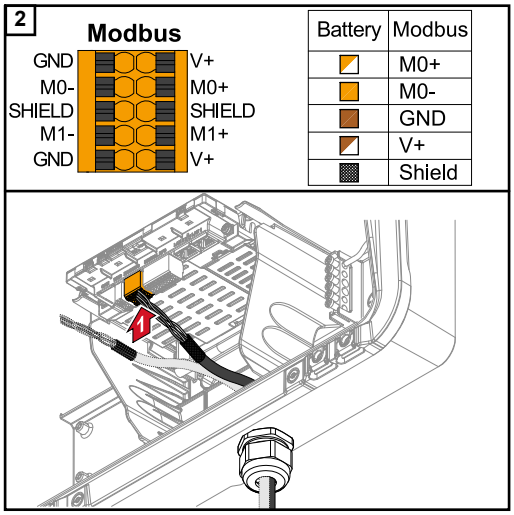

Insert the cable into the respective slot and check the cable is securely retained.

IMPORTANT!
Use only twisted pairs for connecting "Data +/-" and "Enable +/-", see section **Permitted cables for the data communication area** on page **55**.

Twist the cable shield and insert into the "SHIELD" slot.

IMPORTANT!
Improperly fitted shielding can cause data communication problems.

For the wiring proposal recommended by Fronius, see page **144**.

Terminating resistors

It may be possible for the system to function without terminating resistors. However, owing to interference, the use of terminating resistors according to the following overview is recommended for trouble-free functioning.

For permissible cables and max. distances see chapter **Permitted cables for the data communication area** on page **55**.

IMPORTANT!
Terminating resistors that are not positioned as illustrated can result in interference in the data communication. If the terminating resistor on the battery cannot be deactivated, the battery is to be set up at the bus end (see option 2, 3).